Robertson WORLDWIDE®
INNOVATIVE LIGHTING SOLUTIONS

HP21827P

Ballast Type:	Electromagnetic	Starting Method:	Preheat Start	Unit Color:	Black
Input Voltage:	277VAC +5%,-10%	Lamp Connection:	Parallel	Unit Weight:	2.3 lbs.
Input Frequency:	60Hz				

ELECTRICAL SPECIFICATIONS:

Line Voltage (V)	Lamp Type	Lamp Watts	No. of Lamps	Line Current (A)	Input Power (W)	Power Factor	Max Current THD (%)	Current Crest Factor	Ballast Factor	Wiring Diagram
277	CFQ18W/G24d	18	2	0.18	44	≥ 0.95	≤ 30	≤ 1.5	1.00	110

PERFORMANCE:
- Electromagnetic Reactor Type Ballast
- Preheat Start
- Parallel Operation
- High Power Factor
- Normal Ballast Factor
- Encased & Potted
- Sound Rated A
- Meets ANSI Standard C82.1 for Ballast Requirements

APPLICATION:
- Maximum Case Temperature: 194ºF/90ºC
- Maximum Ambient Temperature: 104ºF/40ºC
- Minimum Starting Temperature: 32ºF/0ºC
- Remote Mounting: 10 ft. Max. Lead Length, 18AWG

SAFETY/STANDARDS:
- UL/935 Listed (Class P, Type 1 Outdoor)
- CSA/C22.2 Certified
- No PCB's, Type HL
- Auto Reset Thermal Protection
- RoHS Compliant

SKU INFORMATION:
- 3P10113 (Version 4 - Bottom Leads With Studs)

CASE STYLE: 10F

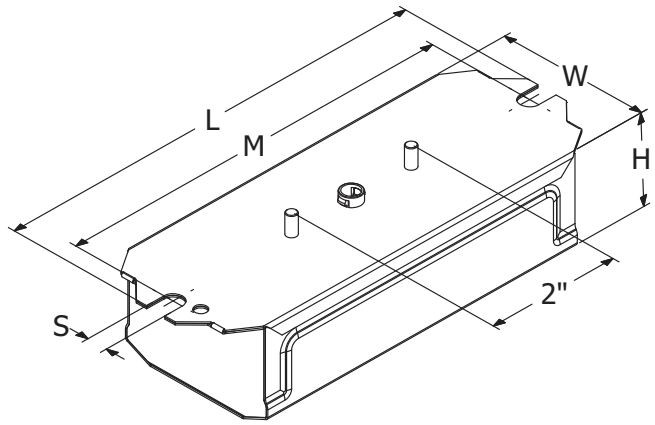

L	W	H	M	S
6 9/16	2 3/8	1 9/16	5 15/16	5/16
6.54	2.38	1.55	5.96	0.31
16.61 cm	6.05 cm	3.94 cm	15.14 cm	0.79 cm

WIRING DIAGRAM: 110

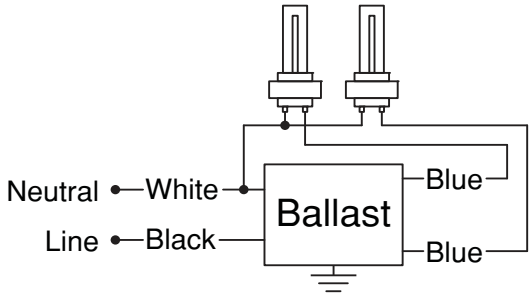

- Black: 8"
- White: 8"
- Blue: (2) 8"
  Tolerance: +1.00, -0.50"
- Strip: 0.375" ± 0.060

WARRANTY:
Robertson Worldwide warrants to the purchaser that this ballast will be free from defects in material or workmanship for a period of 2 years from date of manufacture when properly installed and under normal condition of use. For more information on Robertson Worldwide ballasts, visit www.robertsonlighting.com
Specifications subject to change without notice.