Robertson WORLDWIDE®
INNOVATIVE LIGHTING SOLUTIONS

SP258

Ballast Type:	Electromagnetic	Starting Method:	Preheat Start	Unit Color:	Raw
Input Voltage:	120VAC +5%,-10%	Lamp Connection:	Series	Unit Weight:	0.73 lbs.
Input Frequency:	60Hz				

ELECTRICAL SPECIFICATIONS:

Line Voltage (V)	Lamp Type	Lamp Watts	No. of Lamps	Line Current (A)	Input Power (W)	Power Factor	Max Current THD (%)	Current Crest Factor	Ballast Factor	Wiring Diagram
120	F25T12	25	1	0.40	26	≥ 0.50	≤ 10	≤ 1.6	0.80	001

PERFORMANCE:
- Electromagnetic Reactor Type Ballast
- Preheat Start
- Series Operation
- Normal Power Factor
- Normal Ballast Factor
- Clamped Core and Coil
- Sound Rated A
- Meets ANSI Standard C82.1 for Ballast Requirements

APPLICATION:
- Maximum Case Temperature: 194ºF/90ºC
- Maximum Ambient Temperature: 104ºF/40ºC
- Minimum Starting Temperature for Linear: 50ºF/10ºC
- Remote Mounting: 10 ft. Max. Lead Length, 18AWG

SAFETY/STANDARDS:
- UL/935 Listed (Type 1 Outdoor)
- CSA/C22.2 Certified
- No PCB's
- RoHS Compliant

SKU INFORMATION:
- 3P10130 (Version 1 - Leads Out One End)

CASE STYLE: 2X

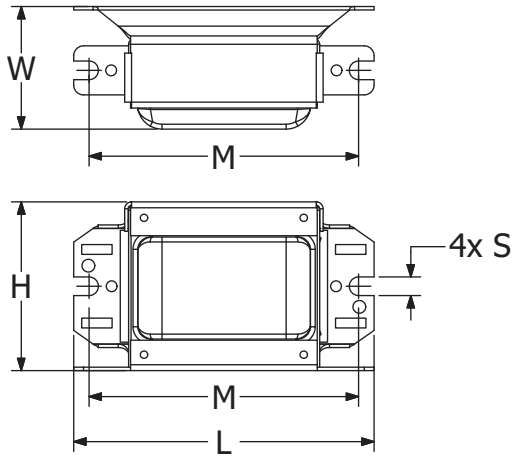

L	W	H	M	S
3 1/16	1 3/8	1 12/16	2 12/16	3/16
3.07	1.32	1.72	2.75	0.19
7.78 cm	3.35 cm	4.37 cm	6.99 cm	0.47 cm

WIRING DIAGRAM: 001

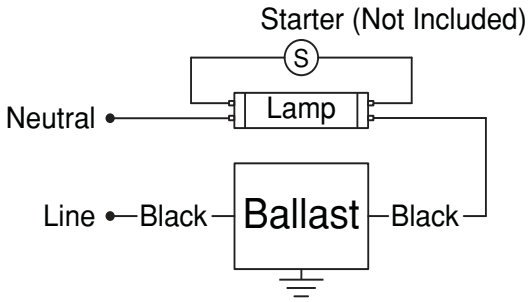

Ballast lead connections are interchangeable.

- Black: 7.00" +1.00, -0.50
- Black: 22.00" +2.00, -1.00
- Strip: 0.375" ± 0.060

WARRANTY:
Robertson Worldwide warrants to the purchaser that this ballast will be free from defects in material or workmanship for a period of 2 years from date of manufacture when properly installed and under normal condition of use. For more information on Robertson Worldwide ballasts, visit www.robertsonlighting.com
Specifications subject to change without notice.