G-9 EDGE

DESCRIPTION:

The Brilliance LED G9 EDGE is an ideal replacement for halogen G9 lamps and provides excellent performance with its retrofit design. Suitable for most existing fixtures, this lamp offers extremely long life and low power consumption, and it is maintenance free.

FEATURES:

- Dimmable
- G-9 Base
- UV Free
- Thermal ceramic body
- Excellent heat dissipation
- CAUTION: Risk of electric shock, use in dry locations only, not for use in totally enclosed fixtures.

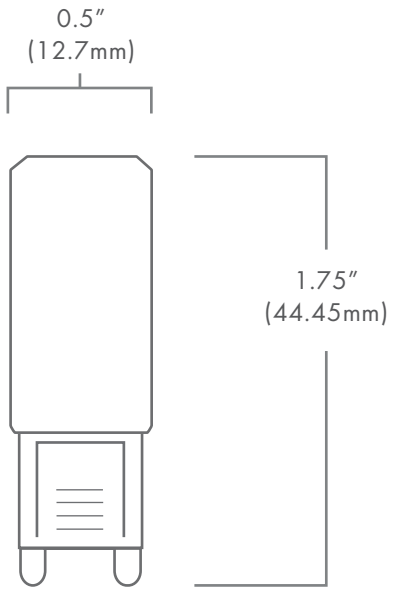

PART NUMBER: BRI G9 EDGE 120 2700

Wattage	1.8
Lumens	160
Beam Spread	360°H 360°V
Kelvin Temperature	2700
Input Voltage	120VAC
Replaces	25W Halogen
CRI	90
IP	60
Lamp Life (hours)	25,000
Warranty (years)	3

