LIGHT BAR

DESCRIPTION:

Made in the USA, the Light Bar is easy to install and comes in assorted sizes. Rugged construction with anodized aluminum rail.

FEATURES:

- 6′ lead of18 gauge direct burial wire
- Custom lengths up to 90″
- Custom colors available
- Dimmable w/ most magnetic transformers
- Mounting Brackets available
- Shield available in copper and stainless steel for 3 & 6 only

Kelvin Temperature	2700
Operating Range	8-18VAC
Input Voltage	12VAC
Chipset	CREE
CRI	85
IP	68
Warranty (years)	5

Length	LEDs	Lumens	Watts
5 1/4″	3	135	2.6
9 1/8″	6	270	5.2
13″	9	405	7.8



PART NUMBER: BRI XXXX LED XX

Light Bar = LB Mounting Bracket = MB LB & MB Kit = LBMB	# of LED's 3 6 9

Optional - Light Bar Shield (3 & 6 LED only)

PART NUMBER: LBS X XXXXXX

# of LED's 3 6	Material COPPER STAINLESS STEEL

NOT for installation within 10 ft of swimming pool per NEC Article 411-2

ATTENTION: Operating voltage range is 8-18 Volts AC/DC



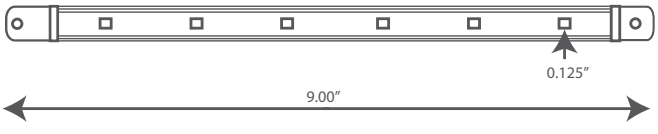





Optional:
Light Bar Shield
in 3 and 6 LEDs

BRILLIANCE LED®
A HIGHER LIGHT FORM®

3 LED LIGHT BAR MOUNTING BRACKET

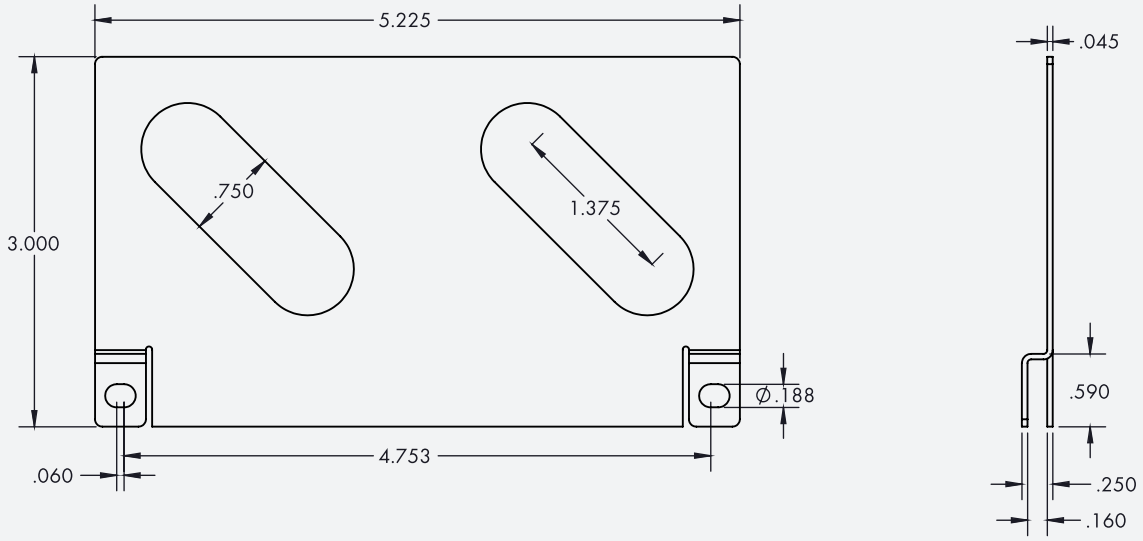

6 LED LIGHT BAR MOUNTING BRACKET

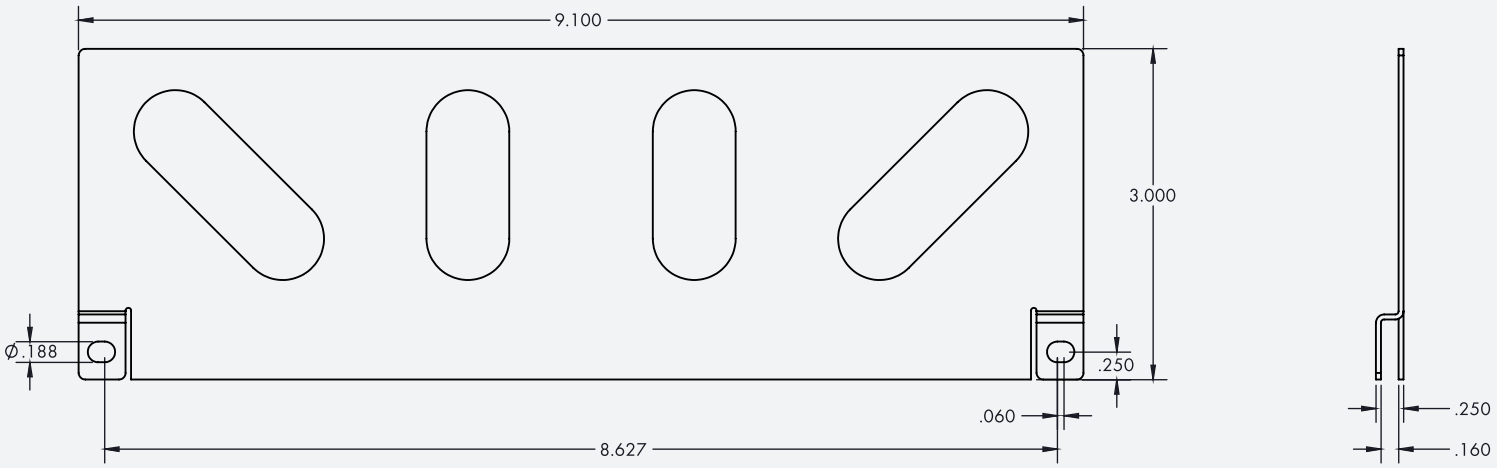

9 LED LIGHT BAR MOUNTING BRACKET

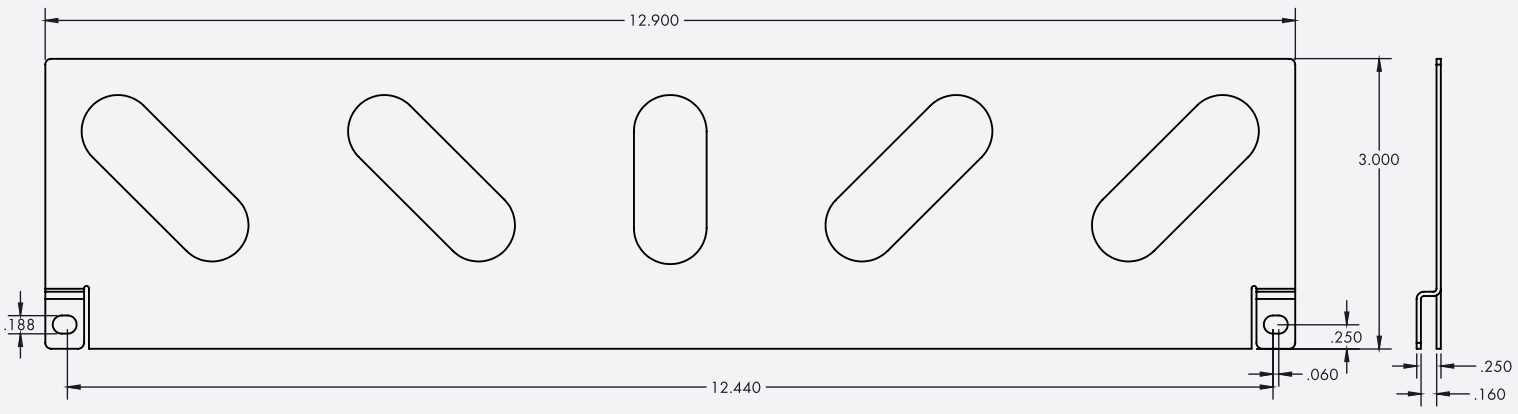

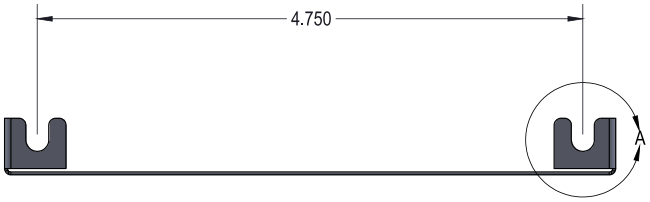

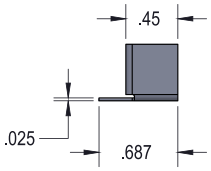

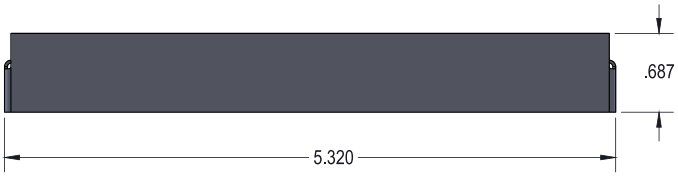

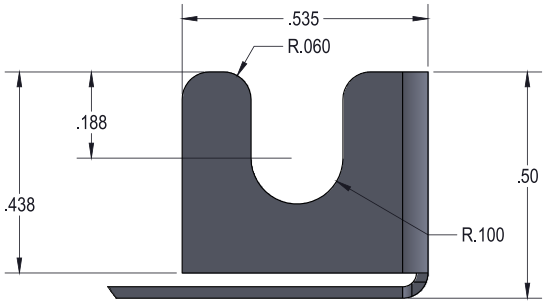

LIGHT BAR SHIELD
3 LED



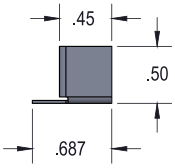



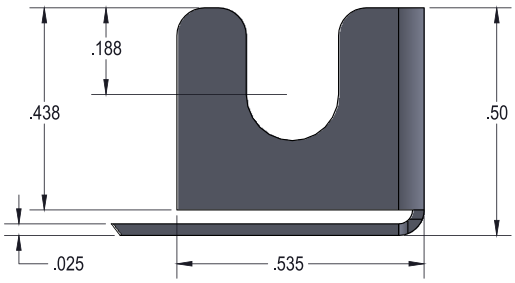

LIGHT BAR SHIELD
6 LED