BRILLIANCE LED®
A HIGHER LIGHT FORM®

3 LED LIGHT BAR MOUNTING BRACKET

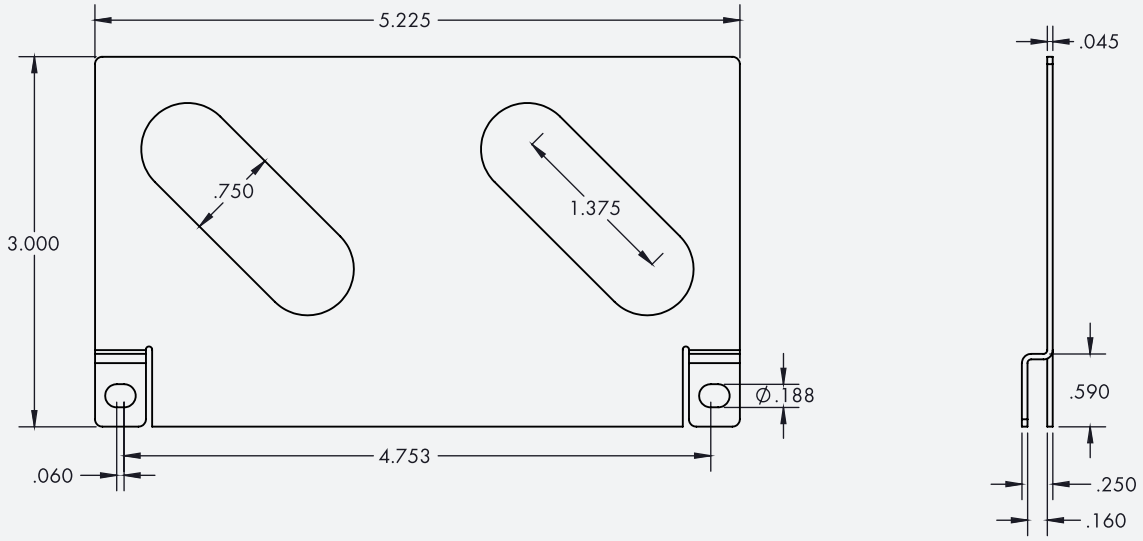

6 LED LIGHT BAR MOUNTING BRACKET

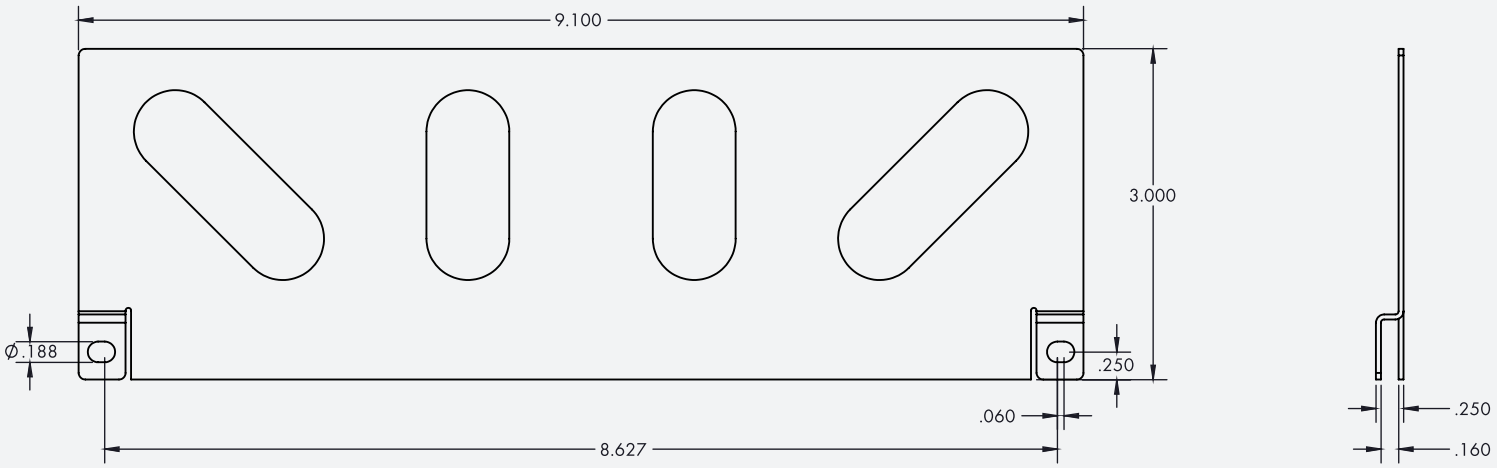

9 LED LIGHT BAR MOUNTING BRACKET

