BRISKM32L



The versatile, low-cost, low-profile wall pack. BRISK™ - efficient and affordable LED light.

Color: Bronze

Weight: 4.2 lbs

Project:	**Type:**
Prepared By:	**Date:**

Driver Info

Type	Constant Current
120V	0.17A
208V	0.11A
240V	0.10A
277V	0.08A
Input Watts	20.1W

LED Info

Watts	22W
Color Temp	5000K (Cool)
Color Accuracy	74 CRI
L70 Lifespan	60,000 Hours
Lumens	3,460 lm
Efficacy	172.1 lm/W

Technical Specifications

Compliance

UL Listed:
Suitable for wet locations

IESNA LM-79 & LM-80 Testing:
RAB LED luminaires and LED components have been tested by an independent laboratory in accordance with IESNA LM-79 and LM-80.

IP Rating:
Ingress protection rating of IP66 for dust and water

Trade Agreements Act Compliant:
This product is a product of Cambodia and a "designated country" end product that complies with the Trade Agreements Act

Performance

Lifespan:
60,000-Hour LED lifespan based on IES LM-80 results and TM-21 calculations

Wattage Equivalency:
Equivalent to 100W Metal Halide or 100W HPS

LED Characteristics

LEDs:
Long-life, high-efficacy, surface-mount LEDs

Color Uniformity:
RAB's range of Correlated Color Temperature follows the guidelines of the American National Standard for Specifications for the Chromaticity of Solid State Lighting (SSL) Products, ANSI C78.377-2017.

Electrical

Driver:
Constant Current, Class 2, 50/60Hz, 120V: 0.17A, 208V: 0.11A, 240V: 0.10A, 277V: 0.08A

THD:
9.24% at 120V, 17.87% at 277V

Power Factor:
99.5% at 120V, 90.4% at 277V

Surge Protection:
2kV

Optical

BUG Rating:
B1 U3 G2

Construction

Maximum Ambient Temperature:
Suitable for use in up to 40°C (104°F)

Cold Weather Starting:
The minimum starting temperature is -40°C (-40°F)

Housing:
Precision die-cast aluminum

Reflector:
Specular

Lens:
Diffused acrylic

Gaskets:
Silicone foam

Finish:
Formulated for high durability and long-lasting color

Green Technology:
Mercury and UV free. RoHS-compliant components.

Installation

Mounting:
Heavy duty, die-cast junction box with four (4) conduit entries (one top, two side, one back)

Other

5 Yr Limited Warranty:
The RAB 5-year, limited warranty covers light output, driver performance and paint finish. RAB's warranty is subject to all terms and conditions found at rablighting.com/warranty.

Copyright © 2025 RAB Lighting All Rights Reserved Note: Specifications are subject to change at any time without notice

Dimensions

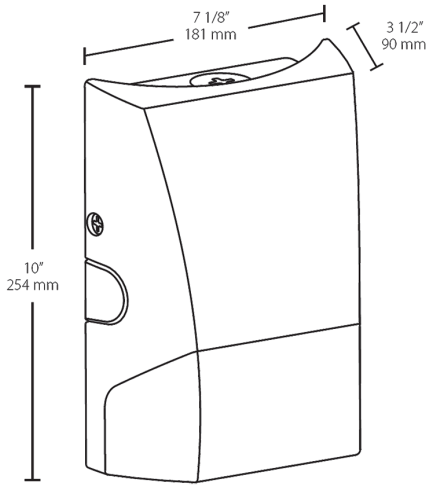

Features

- Economical
- Traditional non-cutoff design
- 60,000-hour LED lifespan
- 5-Year, limited warranty

Ordering Matrix

Family	Lumen Package/Wattage	CCT/CRI	Finish	Options
BRISK	M32L			
	S11L = 1100lm / 9W **S17L =** 1700lm / 14W **M32L =** 3200lm / 22W **M48L =** 4800lm / 35W	**Blank =** 5000K Cool / 70 CRI **740 =** 4000K Neutral / 70 CRI **730 =** 3000K Warm / 70 CRI	**Blank =** Bronze **W =** White	**Blank =** No Option **/PCU =** 120-277V Photocell

Copyright © 2025 RAB Lighting All Rights Reserved Note: Specifications are subject to change at any time without notice