Features - Specifications

- Type – medium and mogul base
- Rating – 660, 1000, 1200, or 2500 watts 250 volts
- Porcelain base (3742, 3842, 4229)
- Heat resistant thermoplastic base (3743R)
- Binding screw terminals
- Copper-alloy screw shells (4229)
- UL Listed File #E15016 – Guide #00IX
- CSA Certified – Guide #240-A-9.90 Class 6231 (3742)

Applications

- 4229 – sign and fixtures
- Prefocus – where the light source is required at the focal point of the reflector, such as photoelectric systems, stage lighting, aircraft and projection equipment



4229



3742

MEDIUM BASE – CLEAT WIRING TYPE

CATALOG NUMBER	RATING		DESCRIPTION
	WATTS	VOLTS	
4229	660	250	White porcelain base, cleat or concealed wiring

MEDIUM BASE – PREFOCUS TYPE

CATALOG NUMBER	RATING		DESCRIPTION
	WATTS	VOLTS	
3742	1200	250	White porcelain base, surface or clamp mounting
3743R	1000	250	Black thermoplastic base, surface or clamp mounting



3743R

MOGUL BASE – PREFOCUS TYPE

CATALOG NUMBER	RATING		DESCRIPTION
	WATTS	VOLTS	
3842	2500	250	Gray porcelain base, surface mounting



3842

PRODUCT DIMENSIONS – ( ) Indicates mm dimensions

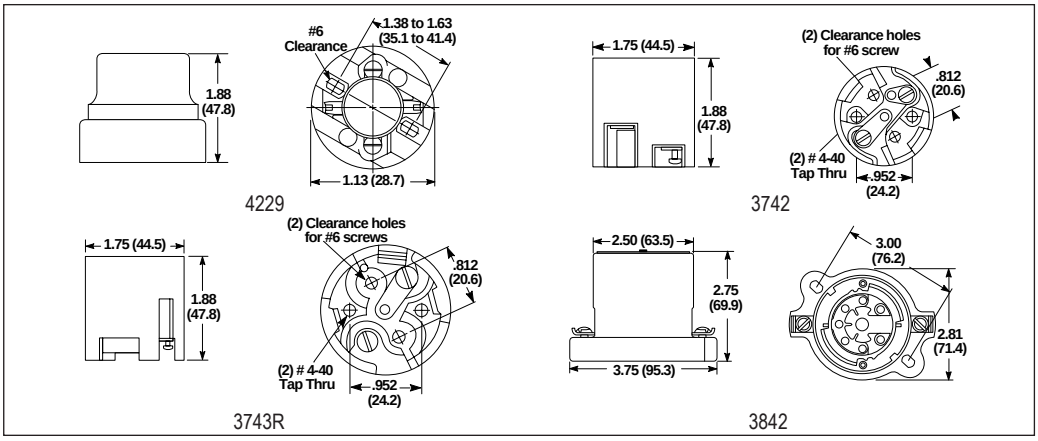

Specifications are subject to change without notice.