

4051



4070



4301W



4304W



4400W



4300W

Features - Specifications

- Rating 660W – 600 volts
- Molded, white thermoset urea
- Heavy-gauge, copper-alloy contacts
- Contacts silver plated to assure reliable, low-resistance junction with lamp pins
- Quickwire pressure terminals (except 4300W)
- Center guidepost for easy lamp insertion
- UL Listed File #E5570 – Guide #OKCT
- CSA Certified File #LR19195 – Guide #240-A-5.14 Class 6231 (except 4300W)

MEDIUM BI-PIN – LAMP SIZE T8, T12

CATALOG NUMBER	DESCRIPTION
4051 ①	White, Pal-nut installed, with slide-on lugs for 18-gauge metal
4070 ②	White, U-bend lampholder with slide-on lugs for 18-gauge metal
4301W	White, tapped bracket, .315 (8.0) thick, #6-32x¼" screw assembled

MEDIUM BI-PIN LOW PROFILE – LAMP SIZE T8, T12

CATALOG NUMBER	DESCRIPTION
4304W	White, tapped bracket, .343 (8.7) thick, screw assembled
4304W12	White, without bracket, with centered vertical slot in base to engage lance tab, .343 (8.7) thick
4304W7	White, center hole tapped for #8-32 screw, .343 (8.7) thick

MEDIUM BI-PIN – LAMP SIZE T6, T8, T12 FOR PRE-HEAT OR RAPID START LAMPS

CATALOG NUMBER	DESCRIPTION
4400W	White, .315 (8.0) thick with "U" base, slide on lugs
4300W	White tombstone with terminal screws

PRODUCT DIMENSIONS – ( ) Indicates mm dimensions

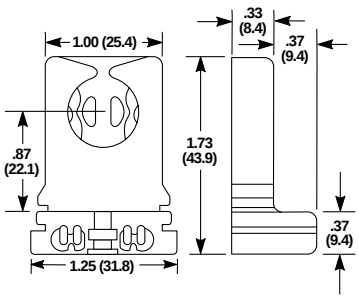

4051

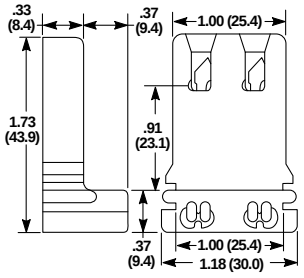

4070

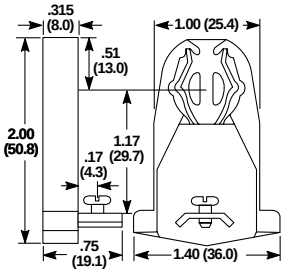

4301W

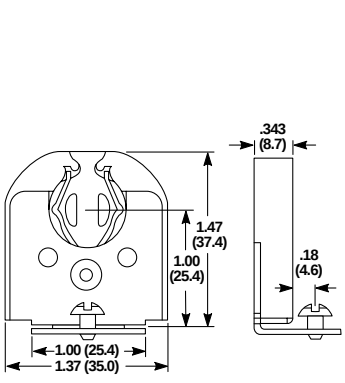

4304W

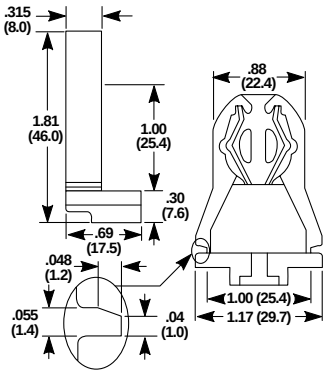

4400W

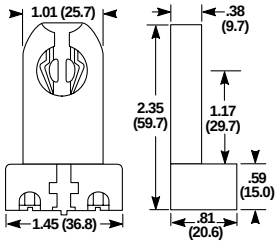

4300W

①Screws supplied separately.
②U Bend circuit interrupting not available.
Specifications are subject to change without notice.