

600S



600P



610S



610P



620S



620P



4455

Features - Specifications

SLIMLINE, MEDIUM BI-PIN, RECESSED DOUBLE CONTACT

- Rating – 660W, 600V (H.V. slimline 1000V)
- Lamp size – T6, T8, T12, T17
- Color locating key simplifies assembly
- Quick snap-in mounting
- Quickwire spring grip terminals
- UL Listed File #E5570 – Guide #OKCT
- CSA Certified File #LR19195 – Guide #240-A-5.14 Class #6231
- 4455 – UL Recognized Component Listed for United States and Canada - UL File #E5570

MEDIUM BI-PIN, 660 WATTS 600V

CATALOG NUMBER	DESCRIPTION
600S	Medium bi-pin, stationary end
600P	Medium bi-pin, plunger end
4455	Medium bi-pin weather protective molded (PVC) lampholder with wire leads

SLIMLINE, 660 WATTS 1000V

CATALOG NUMBER	DESCRIPTION
610S	Slimline, stationary end
610P	Slimline, plunger end

RECESSED DOUBLE CONTACT, 660 WATTS 600V

CATALOG NUMBER	DESCRIPTION
620S	Recessed double contact, stationary end
620P	Recessed double contact, plunger end

PRODUCT DIMENSIONS – ( ) Indicates mm dimensions

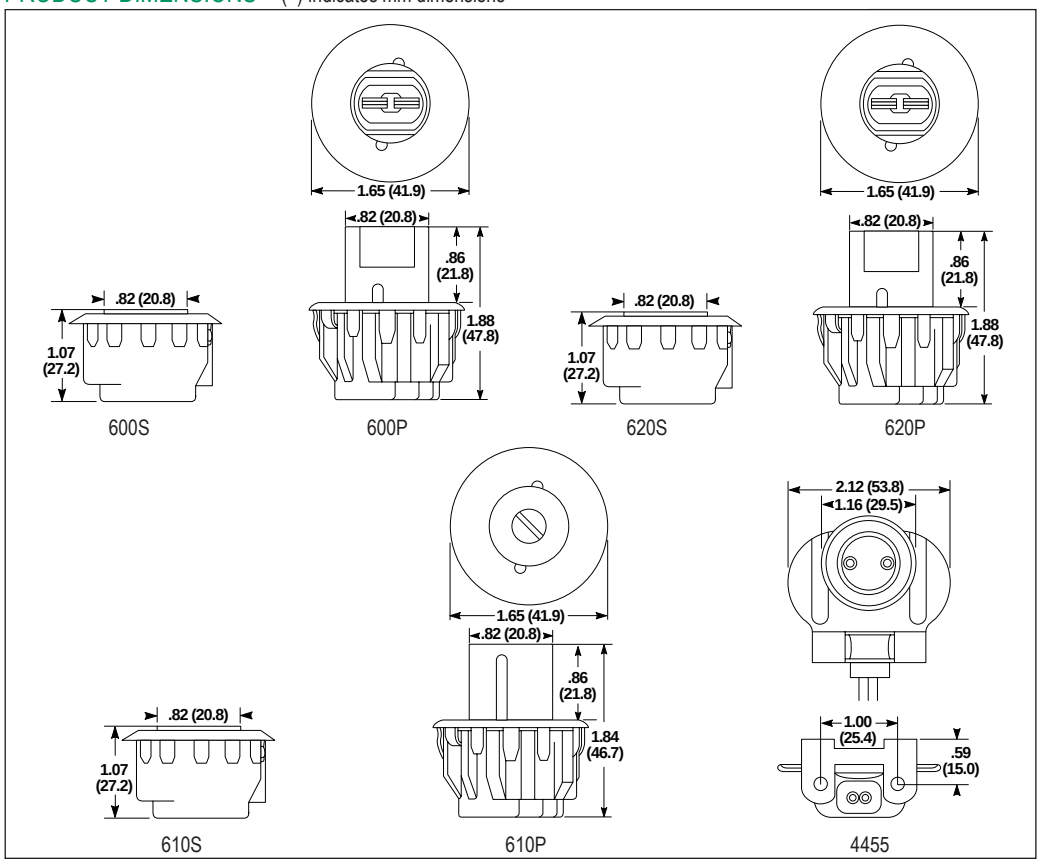

Specifications are subject to change without notice.