MasterColor CDM-R Elite

MASTERColor CDM-R Elite 35W/930 Med PAR30L 10D

The Elite family is at the very top of the MasterColor CDM range, and gives a unique combination of unbeatable light quality and consistent performance over lifetime, while keeping running costs low. MasterColor metal halide lamps deliver consistent white light and higher color rendering than any standard metal halide source for architectural lighting.MasterColor CDM Elite PAR30L lamps deliver similar performance as the MasterColor Elite family lamps in the familiar PAR30L shape.

Product data

- General Characteristics

Base	Medium [Single Contact Medium Screw]
Bulb	PAR30L [PAR 3.75 inch/95mm Long]
Bulb Finish	Clear
Operating Position	Universal [Any or Universal (U)]
Avg. Hrs. Life	15000 hr

- Light Technical Characteristics

Beam Description	Spot
Beam Angle	10 D
Approx. MBCP	42000 cd
Color Code	930 [CCT of 3000K]
Color Rendering Index	88 (min), 91 (nom) Ra8
Color Designation	Warm White
Color Temperature	3000 K
Forward Luminous Output	2700 Lm
Forward Luminous Efficacy	69 Lm/W
LLMF - end nominal lifetime	80 %
Forward Lum Maintenance 15000h	80 %
Design Mean Lumens	2300 Lm
Chromaticity Coordinate X	0.437 -
Chromaticity Coordinate Y	0.400 -
Luminous flux in 90° cone	2400 Lm

- Electrical Characteristics

System Power EM	47 W
System Power EL	43 W
Watts	35 W
Lamp Wattage	35 W
Lamp Wattage EM 25°C, Rated	39 W
Lamp Wattage EL	35 W
Lamp Wattage EL 25°C, Rated	39.0 W
Lamp Voltage	90 V
Lamp Current EM	430 A
Lamp Current EL	430 A
Ignition Time	30 (max) s
Run-up time 90%	3 (max) min
Re-ignition Time [min]	15 (max) min
Dimmable	No
Warm-up Time to 60% Light Outp	120 s

- Environmental Characteristics

Energy Efficiency Label (EEL)	-
Mercury (Hg) Content	4.7 mg
Energy consumption kWh/1000h	43 kWh

- Measuring Conditions

Switching cycle	1350X

- Luminaire Design Requirements

Cap-Base Temperature	200 (max) C
Bulb Temperature	300 (max) C

PHILIPS

MasterColor CDM-R Elite

- Product Dimensions

Overall Length C	123 (max) mm
Diameter D	97 (max) mm
Max Overall Length (MOL) - C	4.84 (max) in

- Product Data

Product number	426452
Full product name	MASTERColor CDM-R Elite 35W/930 Med PAR30L 10D
Short product name	CDM-R Elite 35W/930 E26/24 PAR30L 10D
Pieces per Sku	1
eop_pck_cfg	6
Skus/Case	6
Bar code on pack	46677426453
Bar code on case	50046677426458
Logistics code(s)	928108300615
tpd_ilcos_cd	MRS/UB-35/30/1A-H-E26
eop_net_weight_pp	0.220 kg

Warnings and Safety

- R "WARNING: These lamps can cause serious skin burn and eye inflammation from short wave ultraviolet radiation if outer envelope ot the lamp is broken or puntured. Do not use where people will remain for more than a few minutes unless adequate shielding or other safety precuations are used. Certain lamps that will automaticallly extinguish when the outer envelope is broken or punctured are commercially available." This lamp complies with FDA radiation performance standard 21 CFR subchapter J. (USA:21 CFR 1040.30 Canada: SOR/DORS/80-381)

Dimensional drawing

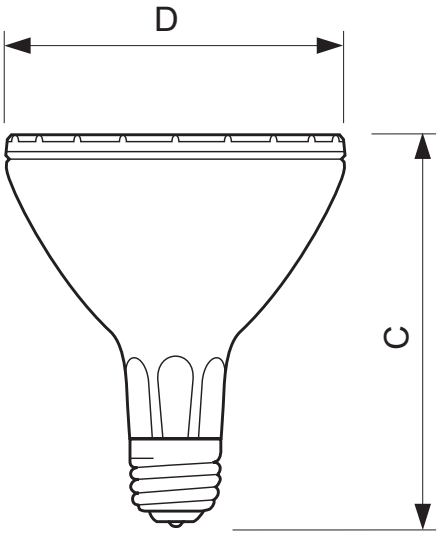

E26

MASTERColor CDM-R Elite 35W/930 Med PAR30L 10D

Product	C (Max)	D (Max)
CDM-R Elite 35W/930 E26 PAR30L 10D	123	97

Photometric data

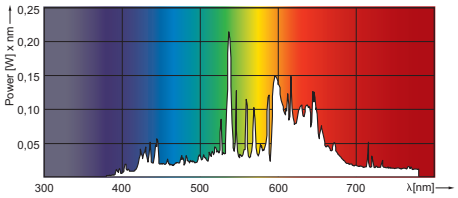

CDM-R Elite 35W /930 PAR30L

© 2014 Koninklijke Philips N.V. (Royal Philips)
All rights reserved.

Specifications are subject to change without notice. Trademarks are the property of Koninklijke Philips N.V. (Royal Philips) or their respective owners.

www.philips.com/lighting