naturaled®

PROJECT:	
SCHEDULE:	DATE:
PREPARE BY:	
NOTES:	

FDL 7X6 Floodlight High Wattage CCT3

DESCRIPTION

The naturaLED® 7X6 selectable wattage and color temperature floodlights offer versatile lighting solutions to meet your needs. Designed with a flood beam distribution, these lights can replace fixtures up to 400 watts. With an IP65 water resistance rating and an IK10 impact rating, they ensure durability in various environments. Ideal for security, spot, and accent lighting, they are perfect for applications such as perimeters, entryways, facades, landscapes, retail spaces, residential complexes, and architectural lighting. The pre-installed yoke-arm or knuckle-mount allows for easy angle adjustments to suit your specific requirements.

5 YEAR WARRANTY

IP65

APPLICATIONS

Security, Architectural, Perimeter, Entryway, Pathway, Landscape

3 CCT SELECT

ADJUSTABLE WATTAGE 3

Rated Life Hours 50,000
Warranty 5 Years

FEATURES

- **DLC Premium**
- **IP65 Rated**
- **UL/cUL Listed**
- **Wattage & Color Selectable**

- Wattage: 100~150W
- Color Temp: CCT3 (30/40/50K)
- Voltage: 120-277V
- Surge Protection: 6KV
- Dimmable: 0-10V
- CRI: >80
- Operating Temperature: -40°F to 113°F
- Beam Angle: NEMA 7x6
- 1/2" NPT Stainless Steel Threaded Nipple
- Recommended Mounting Height: 10~25ft
- Lens: Polycarbonate Lens
- Material: Die Cast Aluminum
- Color: Bronze
- Optional Accessories for Purchase: Photocell Kit, Slip Fitter, Surge Protector
- Warranty: 5-Year Limited Warranty

ACCESSORIES

Photocell Kit

Slip Fitter Mount

Surge Protector

SAMPLE NUMBER FDL150S/76/8C3/BZ-YK

SERIES	WATTAGE	BEAM ANGLE	COLOR TEMP	COLOR	ACCESSORY
FDL	150SW	76	8C3	BZ	YK
Floodlights	150 Selectable Wattage	NEMA 7X6	CRI 80 3CCT (3000/4000/5000K)	Bronze	Yoke Mount

DLC LISTED PREMIUM · UL CERTIFIED · IP65 · 3 CCT SELECT · ADJUSTABLE WATTAGE 3 · 0-10V Dimming · RoHS COMPLIANT · FC · LM 79 · LM 80

© 2025 naturaLED® All rights reserved | www.naturaLED.com | Toll-Free: 855.758.7009 | For informational purposes only. Content is subject to change without notice.

ORDERING

*P= Premium DLC / *S = Standard DLC

Ordering Code	Description	Watts (W)	Lumens (Lm)	CCT (K)	Equiv. Wattage (W)	Voltage	Mount	IP65 Rated	DLC (S/P)
9701	FDL150S/76/8C3/BZ-YK	100	12,000	3CCT	400W	120-277V	Yoke	•	P
		130	16,900	(30/40/50K)					
		150	19,205						
9702	FDL150S/76/8C3/BZ-KNC	100	12,000	3CCT	400W	120-277V	Knuckle	•	P
		130	16,900	(30/40/50K)					
		150	19,205						

ACCESSORIES

Photocell Kit

K141030 REC3PLK/PHO
(P10141+P10030 Twist lock Photocell and Receptacle Mount 120-277V 3-Prong)

Slip Fitter

P10414 MT-FDL/SF/BZ
(Slip Fitter Mount for #9701)

Surge Protector

P10389 SPD-L-10KV-277
(10KV Surge Protection 120-277V)

P10390 SPD-L-20KV-277
(20KV Surge Protection 120-277V)

PACKAGE

Master Carton (pc)	Dimensions (in)	Weight (lb)
2	18”x13.7”x12.4”	12.4

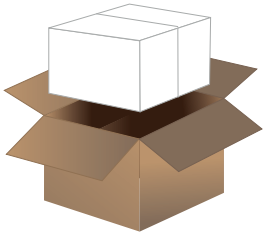

© 2025 naturaLED® All rights reserved | www.naturaLED.com | Toll-Free: 855.758.7009 | For informational purposes only. Content is subject to change without notice.

DIMENSIONS

150 S/Wattage [Yoke]
9.50-lbs

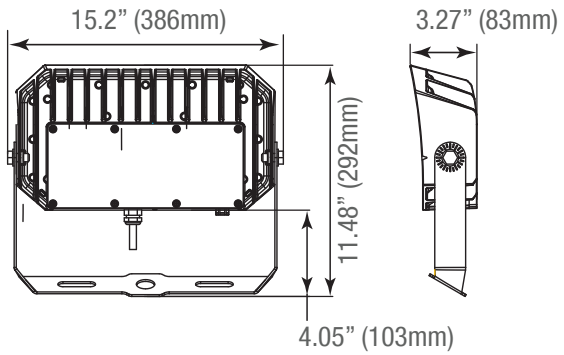

150 S/Wattage [Knuckle]
9.30-lbs

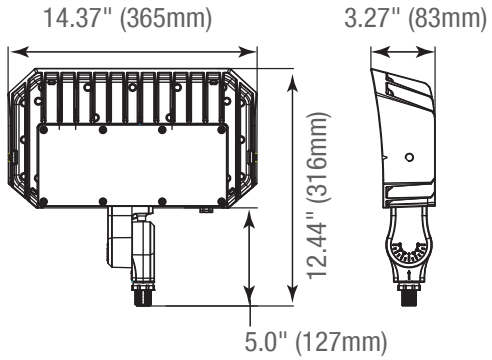

PHOTOMETRICS

150 S/Wattage [Yoke]

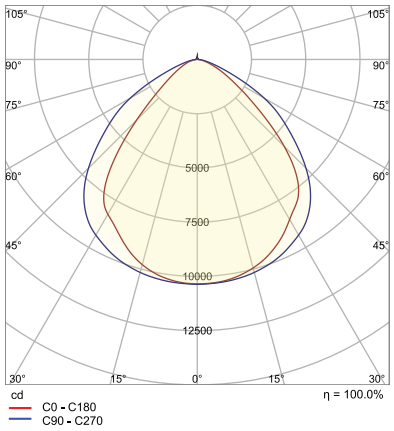

BUG rating B4 U3 G2

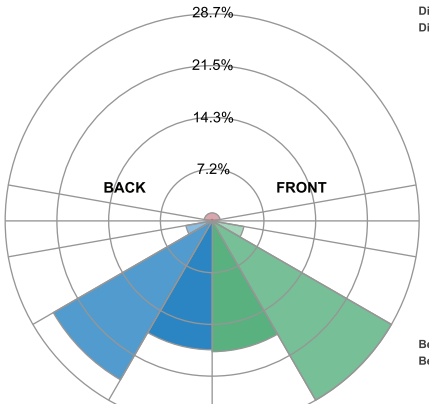

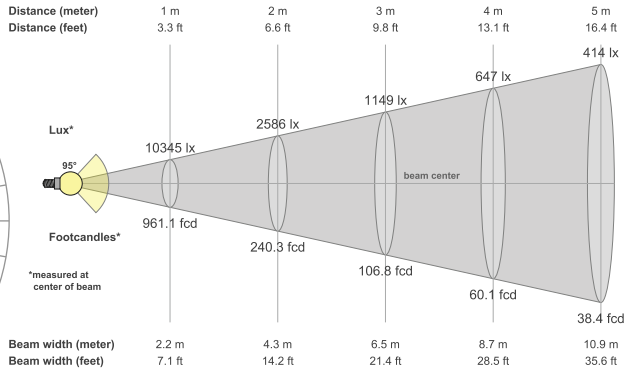

150 S/Wattage [Knuckle]

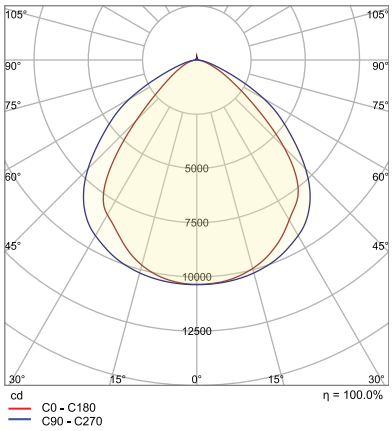

BUG rating B4 U3 G2

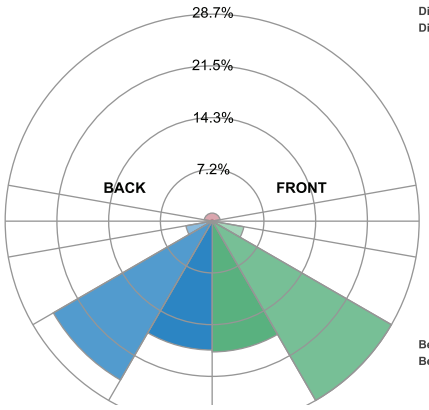

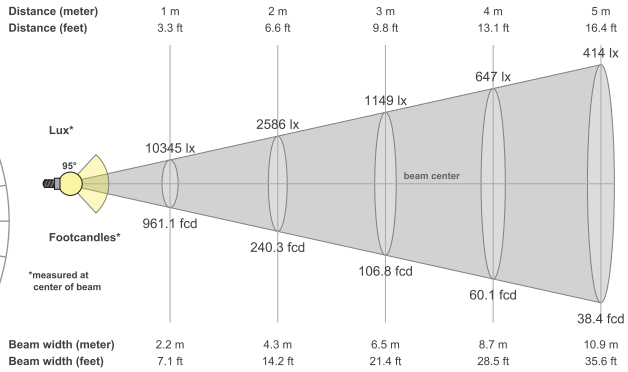

© 2025 naturaLED® All rights reserved | www.naturaLED.com | Toll-Free: 855.758.7009 | For informational purposes only. Content is subject to change without notice.