HALV18L935-F-S

RAB

Textured Silver Frame with Frosted Lens

Note: Fixture will come fully assembled with the frame and lens shown above.

Project:	Type:
Prepared By:	Date:

Driver Info

Type	Constant Current
120V	0.22A
208V	0.13A
240V	0.11A
277V	0.1A
Input Watts	25.9W

LED Info

Watts	25W
Color Temp	3500K (Warm Neutral)
Color Accuracy	93 CRI
R9	66
L70 Lifespan	50,000 Hours
Lumens	1,799 lm
Efficacy	69.5 lm/W

Technical Specifications

Compliance

UL Listed:
Suitable for damp locations. Recommended for indoor use only.

ADA Compliant:
Meets ADA Requirements for wall-mounted luminaires.

IESNA LM-79 & LM-80 Testing:
RAB LED luminaires and LED components have been tested by an independent laboratory in accordance with IESNA LM-79 and LM-80.

Performance

Lifespan:
50,000-Hour LED lifespan based on IES LM-80 results and TM-21 calculations

Wattage Equivalency:
Equivalent to 100W Incandescent

LED Characteristics

LEDs:
Long-life, high-efficacy, surface-mount LEDs; binned and mixed for uniform light output and color

Color Stability:
LED color temperature is warrantied to shift no more than 200K in color temperature over a 5-year period

Color Uniformity:
RAB's range of Correlated Color Temperature follows the guidelines of the American National Standard for Specifications for the Chromaticity of Solid State Lighting (SSL) Products, ANSI C78.377-2017.

Electrical

Driver:
Constant Current, Class 2, 120-277VAC, 50/60Hz, 350mA or 640mA

Dimming Driver:
0 - 10V (at 120-277V), TRIAC and ELV (at 120V only)

THD:
12.6% at 120V, 16.1% at 277V

Power Factor:
98.4% at 120V, 94.3% at 277V

Battery Backup Light Loss Factor:
0.18

Construction

Housing:
Die-cast and extruded aluminum

Lens:
Frosted polycarbonate lens

Operating Temperature:
-20°C (-4°F) to 40°C (104°F)

Green Technology:
Mercury and UV free. RoHS-compliant components.

Finish:
Textured Silver using our environmentally friendly polyester powder coatings are formulated for high-durability and long-lasting color

Installation

Mounting:
Wall mount with junction box included

Other

Warranty:
RAB warrants that our LED products will be free from defects in materials and workmanship for a period of five (5) years from the date of delivery to the end user, including coverage of light output, color stability, driver performance and fixture finish. RAB's warranty is subject to all terms and conditions found at rablighting.com/warranty.

Copyright © 2025 RAB Lighting All Rights Reserved Note: Specifications are subject to change at any time without notice

Dimensions

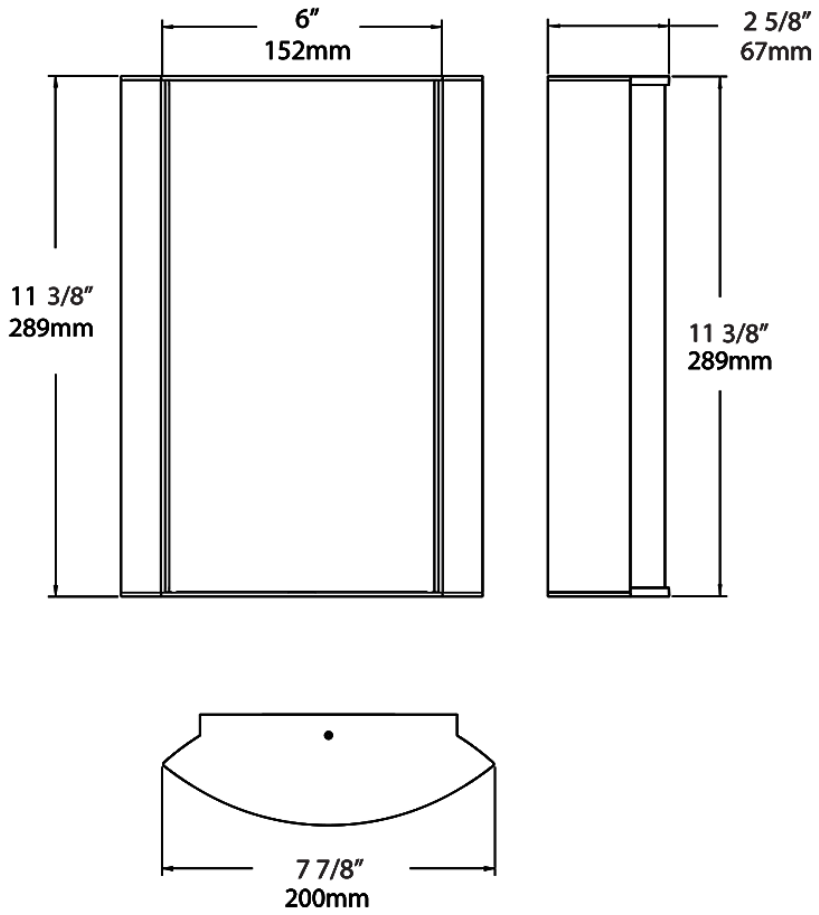

Copyright © 2025 RAB Lighting All Rights Reserved Note: Specifications are subject to change at any time without notice

Ordering Matrix

Family	Lumen Package	CRI/Color Temp		Lens		Finish	Options
HALV	18L	935	–	F	–	S	
	18L = 1800lm / 25W [1] **10L =** 1000lm / 14W [1]	**940 =** 90CRI, 4000K **935 =** 90CRI, 3500K **930 =** 90CRI, 3000K **927 =** 90CRI, 2700K		**MG =** Metallic Spun Gold **MA =** Mirage Bronze **MP =** Mirage Platinum **CS =** Crush Sedona **CW =** Crush Polar White **MC =** Metallic Spun Copper **MS =** Metallic Spun Silver **LH =** Linen Harbor **LW =** Linen Hampton White **TL =** Toffee Leaves **GL =** Green Leaves **NL =** Natural Leaves **FG3 =** Frosted with Grill Style #3 **FG2 =** Frosted with Grill Style #2 **FG1 =** Frosted with Grill Style #1 **F =** Frosted (Standard) **LS =** Linen Stone		**S =** Silver **CU =** Copper **SA =** Satin Nickel **A =** Antique Bronze **K =** Black **W =** White	**Blank =** No Option **/E2 =** Battery Backup **/MVS =** Microwave Occupancy Sensor [2] **/BL =** Bi-Level Control **/LC =** Lightcloud **/MVS/E2 =** Microwave Occupancy Sensor w/Battery Backup [2] **/BL/E2 =** Bi-Level Control w/Battery Backup **/LC/E2 =** Lightcloud w/Battery Backup

[1] *Lumen values are approximations for models with a standard, frosted lens. Visit rablighting.com for exact output based on your specific configuration.*
[2] *Available only with grill pattern*

Copyright © 2025 RAB Lighting All Rights Reserved Note: Specifications are subject to change at any time without notice