A VCC PRODUCT FAMILY

1050A, 1051A, 1052A, 1053A and 1090A Series Non-Relampable Neon-Incandescent Indicator Lights

Description and Features

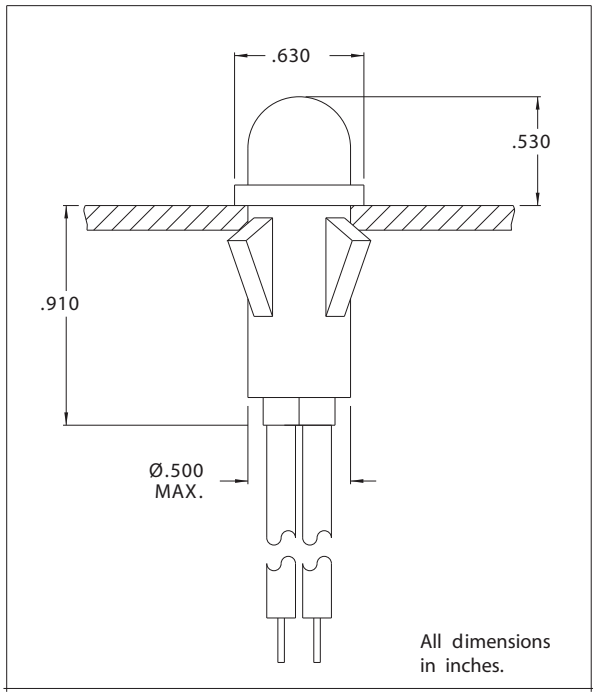

Mounting: Will snap-fit into Ø.500/.505 hole in panels .020/.100 thick. Push-on speednut SN0461 also available. Mounting hole pattern on page SP2.

Wire Leads: No. 22 AWG (105°C) 4.40/4.80 long, stripped .430/.570

Lens: Nylon on model 1050A1, 1050A3, 1050A4, 1050A1, 1051A3, 1051A4, Polycarbonate on all other models.

Bezel: Polished stainless steel. For black finish add "X" after the series letter(s).

Housing: White Nylon

Lens Color	Neon		Incandescent	
	Model No. (105-125VAC)	Model No. (208-250VAC)	Model No. (12V)	Model No. (28V)
Red	1050A1	1051A1	1090A1-12V	1090A1-28V
Clear	1050A2	1051A2	-	-
Amber	1050A3	1051A3	1090A3-12V	1090A3-28V
White	1050A4	1051A4	1090A4-12V	1090A4-28V
Green	1052A5*	1053A5*	1090A5-12V	1090A5-28V
Blue	1052A6**	1053A6**	1090A6-12V	1090A6-28V
Lamp used	C2A+Resistor	C2A+Resistor	#2162	#2187
Lead Color	Black	One Black/One Red	Yellow	Purple

* Incorporates G2B lamp and resistor.
** Incorporates T2B lamp and resistor.
Underwriters Laboratories (UL) File No. E20325
Canadian Standards Association (CSA) File No. LR13346

CML and Chicago Miniature Lamp are registered trademarks of Visual Communications Company, LLC.