A VCC PRODUCT FAMILY

1030D, 1031D, 1033D and 1090D Series Non-Relampable Neon-Incandescent Indicator Lights

Description and Features

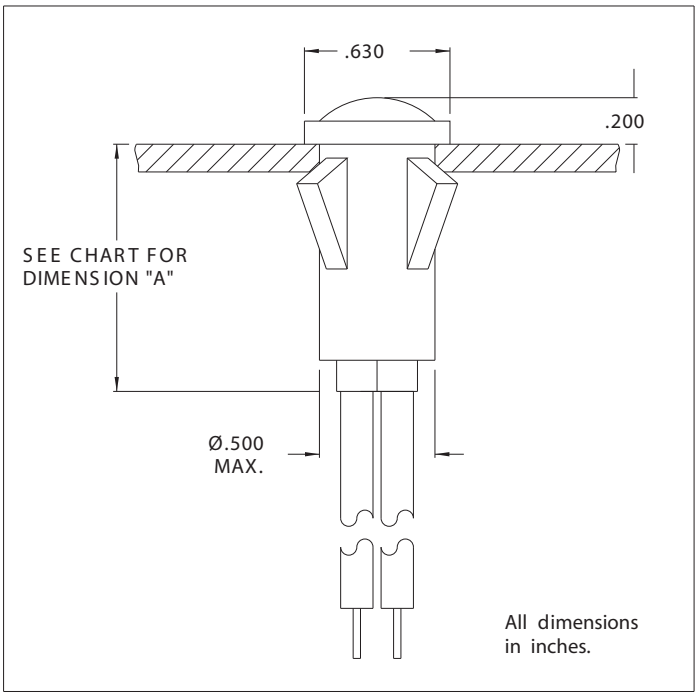

Mounting: Will snap-fit into Ø.500/.505 hole in panels .020/.100 thick. Push-on speednut SN0461 also available. Mounting hole pattern on page SP2.

Wire Leads: No. 22 AWG (105°C) 4.40/4.80 long, stripped .430/.570

Lens: Polycarbonate

Bezel: Polished stainless steel. For black finish add “X” after the series letter(s).

Housing: White Nylon

Lens Color	Neon		Incandescent	
	Model No. (105-125VAC)	Model No. (208-250VAC)	Model No. (12V)	Model No. (28V)
Red	1030D1	1031D1	1090D1-12V	1090D1-28V
Amber	1030D3	1031D3	1090D3-12V	1090D3-28V
White	1030D4	1031D4	1090D4-12V	1090D4-28V
Green	1032D5*	1033D5*	1090D5-12V	1090D5-28V
Lamp used	C2A+Resistor		#2162	#2187
Lead Color	Black	One Black/One Red	Yellow	Purple
"A"	1.130	1.130	.910	.910

* Incorporates G2B lamp and resistor.
Underwriters Laboratories (UL) File No. E20325
Canadian Standards Association (CSA) File No. LR13346