HID REPLACEMENT : A21/23/PS25

DESCRIPTION

LED HID Replacement A21/23/PS25 Lamps directly replace high-wattage incandescent or HID lamps at a fraction of the energy cost. Available in dimming or universal 120-277V options for HID retrofit applications.

FEATURES

- Direct replacement for 150W incandescent or 100-150W HID lamps
- Up to 70% energy savings compared to traditional lamps
- Excellent thermal management
- Dimmable and non-dimmable versions
- Can be used in base up or base down position
- UL1598C - Existing fixtures retain UL certification

WARRANTY

- 5 year limited warranty; see eiko.com for warranty details

APPLICATIONS

- Restaurants & Hospitality
- Retail
- Residential
- Accent/Display Lighting
- Healthcare
- Bollards
- Post-Tops

A21 20W

A23 25W

PS25 35W

PERFORMANCE	Power Consumption	20W	25W	35W
	Lumens	2,900	3,400	4,500
	Efficacy (LPW)	145	136	129
	CRI	80+		
	CCT	4000K, 5000K		
	Life (L70)	25,000 hours		
ELECTRICAL	Power Factor	>0.9		
	Input Voltage	120V; 120-277V		
CONSTRUCTION	Operating Temperature	-25°C (-13°F) to 45°C (113°F)		
	Base	E26		
LISTINGS	Certification(s)	ENERGY STAR® Rated; cULus Classified		
	Material Usage	RoHS Compliant; no mercury or lead		
	Environment	Open and enclosed fixture rated; UL Approved for damp locations		

PERFORMANCE SUMMARY

Order Code	Item #w	Lumens	Watts	LPW	CCT	CRI	Volts	Life/ Hours	Replaces	Dimming	ES
10654	LED20WA21/840-U	2,900	20W	145	4000K	80	120-277V	25,000	50W MH or 50W HPS	Non-Dim	★
10655	LED20WA21/850-U	2,900	20W	145	5000K	80	120-277V	25,000	50W MH or 50W HPS	Non-Dim	★
10656	LED20WA21/840-DIM	2,900	20W	145	4000K	80	120V	25,000	50W MH or 50W HPS	Dimmable	★
10657	LED20WA21/850-DIM	2,900	20W	145	5000K	80	120V	25,000	50W MH or 50W HPS	Dimmable	★
10658	LED25WA23/840-U	3,400	25W	136	4000K	80	120-277V	25,000	70W MH or 50W HPS	Non-Dim	★
10659	LED25WA23/850-U	3,400	25W	136	5000K	80	120-277V	25,000	70W MH or 50W HPS	Non-Dim	★
10660	LED35WPS25/840-U	4,500	35W	129	4000K	80	120-277V	25,000	70W MH or 70W HPS	Non-Dim	★
10661	LED35WPS25/850-U	4,500	35W	129	5000K	80	120-277V	25,000	70W MH or 70W HPS	Non-Dim	★

NOTE: Use order code when ordering. *★ENERGY STAR® Rated*

DIMENSIONS

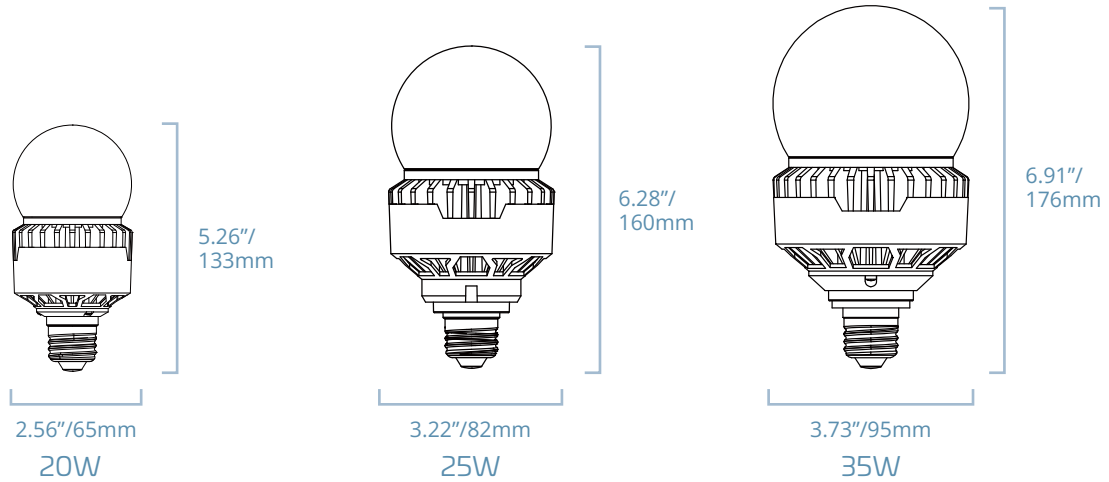

Rev. 6/17/22

©2017 EiKO Global, LLC. World Headquarters: 23220 W. 84th Street, Shawnee, KS 66227 (P) 1.800.852.2217 (F) 1.800.492.8975
EiKO Global Canada, LLC: 81 King Street, Barrie, ON L4N 6B5 Canada (P) 1.888.410.8151 (F) 1.888.705.1335 | eiko.com

PHOTOMETRICS

LED20WA21/8xx-U

ZONAL LUMEN SUMMARY		
Zone	Lumens	%Fixture
0-30	210.71	7.6%
0-40	377.22	13.7%
0-60	836.91	30.3%
0-80	1392.55	50.4%
0-90	1672.05	60.5%
60-80	555.64	20.1%
70-80	283.00	10.2%
80-90	279.50	18.1%
0-180	2762.92	100%

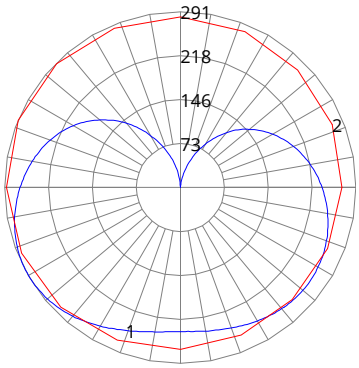

LED20WA21/8xx-U-DIM

ZONAL LUMEN SUMMARY		
Zone	Lumens	%Fixture
0-30	210.71	7.6%
0-40	377.22	13.7%
0-60	836.91	30.3%
0-80	1392.55	50.4%
0-90	1672.05	60.5%
60-80	555.64	20.1%
70-80	283.00	10.2%
80-90	279.50	18.1%
0-180	2762.92	100%

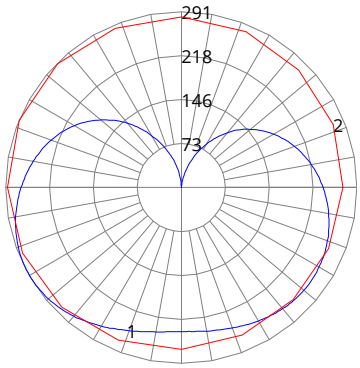

LED25WA23/8xx-U

ZONAL LUMEN SUMMARY		
Zone	Lumens	%Fixture
0-30	279.98	7.7%
0-40	501.93	13.9%
0-60	1117.15	30.9%
0-80	1861.01	51.4%
0-90	2232.87	61.7%
60-80	743.85	20.6%
70-80	378.49	10.5%
80-90	371.86	10.3%
0-180	3617.71	100%

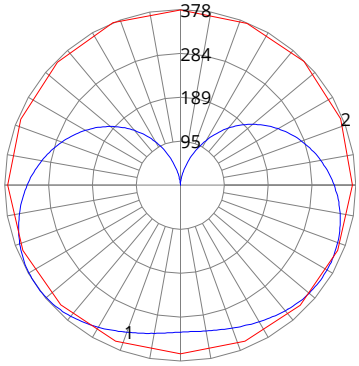

LED35WPS25/8xx-U

ZONAL LUMEN SUMMARY		
Zone	Lumens	%Fixture
0-30	357.45	7.5%
0-40	639.11	13.5%
0-60	1422.02	30.0%
0-80	2381.79	50.3%
0-90	2868.67	60.5%
60-80	959.77	20.3%
70-80	490.60	10.4%
80-90	486.88	10.3%
0-180	4738.63	100%

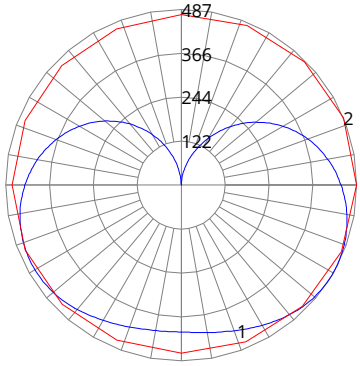

©2017 EiKO Global, LLC. World Headquarters: 23220 W. 84th Street, Shawnee, KS 66227 (P) 1.800.852.2217 (F) 1.800.492.8975
EiKO Global Canada, LLC: 81 King Street, Barrie, ON L4N 6B5 Canada (P) 1.888.410.8151 (F) 1.888.705.1335 | eiko.com