LED HID REPLACEMENT : HORIZONTAL

DESCRIPTION

LED HID Replacement Lamps directly replace high-watt HID fixtures at a fraction of the energy cost.

FEATURES

- LED replacement for high wattage HID fixtures from 125W to 285W
- 360° beam angle; lamp body folds out to provide directional 180° beam angle
- Consumes up to 80% less energy than conventional HID systems
- State-of-the-art LED light sources deliver over 150 lumens per watt
- Lasts 3x longer than metal halide or HPS HID lamps
- Shatter resistant for reduced risk of injury & breakage
- Integral driver, eliminates the need for external driver or ballast
- Suitable for use in totally enclosed fixtures
- Direct line voltage 120-277V - not compatible with ballasts
- Non-dimmable
- Horizontal mounting position
- UL1598C – Existing fixtures retain UL certification
- Built-in 4kV surge protection inlcuded

WARRANTY

- 5 year limited warranty; see eiko.com for warranty details

APPLICATIONS

- Industrial
- Commercial

RoHS Compliant

PERFORMANCE	Power Consumption	27W	45W	63W
	Lumens	4,050	6,750	9,450
	Efficacy (LPW)	150		
	CRI	80+		
	CCT	4000K, 5000K		
	Life (L70)	50,000 hours		
ELECTRICAL	Power Factor	≥0.9		
	THD	<20%		
	Input Voltage	120-277V		
CONSTRUCTION	Operating Temperature	-40°F to 140°F (-40°C to 60°C)		
	Enclosed Temperature	-4°F to 104°F (-20°C to 40°C)		
	Base	E26/EX39		
LISTINGS	Certification(s)	DesignLights Consortium® Qualified; cULus Classified; FCC		
	Material Usage	RoHS Compliant; no mercury or lead		
	Environment	Damp location rated		

Not for sale in California unless otherwise noted.

PERFORMANCE SUMMARY

Order Code	Item #	Lumens	Watts	CCT	CRI	Volts	Base	Beam	MOL E26/EX39	MOD Closed/Open	Life/ Hours	Replaces HID	DLC
11129	LED27WPT/180/40KMED-G8	4,050	27W	4000K	80+	120-277V	E26	360°/180°	8.03”/8.82”	3.23”/5.28”	50,000	125W	
11130	LED27WPT/180/50KMED-G8	4,050	27W	5000K	80+	120-277V	E26	360°/180°	8.03”/8.82”	3.23”/5.28”	50,000	125W	
11131	LED27WPT/180/40KMOG-G8	4,050	27W	4000K	80+	120-277V	EX39	360°/180°	8.03”/8.82”	3.23”/5.28”	50,000	125W	✓
11132	LED27WPT/180/50KMOG-G8	4,050	27W	5000K	80+	120-277V	EX39	360°/180°	8.03”/8.82”	3.23”/5.28”	50,000	125W	✓
11133	LED45WPT/180/40KMED-G8	6,750	45W	4000K	80+	120-277V	E26	360°/180°	9.25”/10.04”	3.23”/5.28”	50,000	200W	
11134	LED45WPT/180/50KMED-G8	6,750	45W	5000K	80+	120-277V	E26	360°/180°	9.25”/10.04”	3.23”/5.28”	50,000	200W	
11135	LED45WPT/180/40KMOG-G8	6,750	45W	4000K	80+	120-277V	EX39	360°/180°	9.25”/10.04”	3.23”/5.28”	50,000	200W	✓
11136	LED45WPT/180/50KMOG-G8	6,750	45W	5000K	80+	120-277V	EX39	360°/180°	9.25”/10.04”	3.23”/5.28”	50,000	200W	✓
11137	LED63WPT/180/40KMOG-G8	9,450	63W	4000K	80+	120-277V	EX39	360°/180°	10.63”/11.42”	3.23”/5.28”	50,000	285W	✓
11138	LED63WPT/180/50KMOG-G8	9,450	63W	5000K	80+	120-277V	EX39	360°/180°	10.63”/11.42”	3.23”/5.28”	50,000	285W	✓

NOTE: Use order code when ordering. *✓DesignLights Consortium® Qualified*

DIMENSIONS

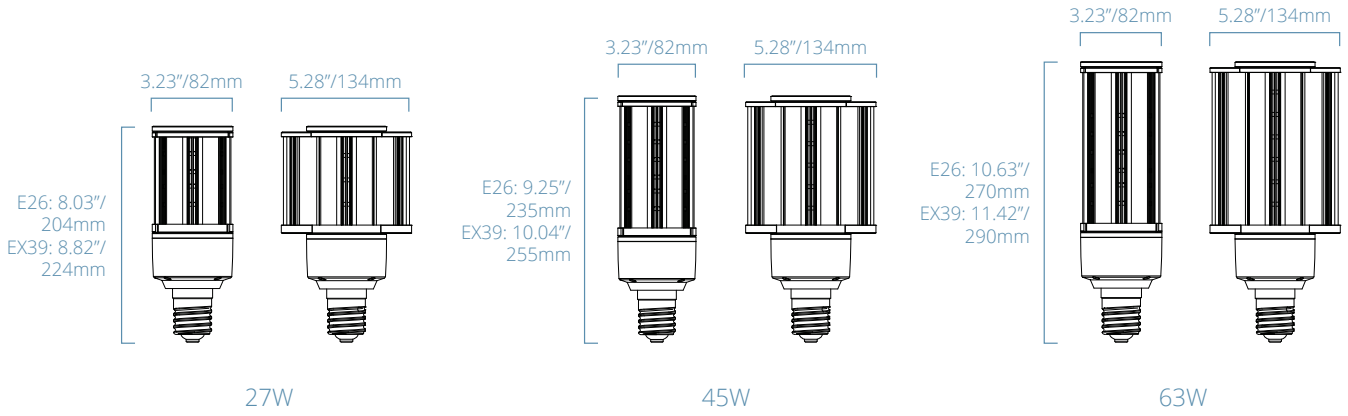

Rev. 9/15/21

©2017 EiKO Global, LLC. World Headquarters: 23220 W. 84th Street, Shawnee, KS 66227 (P) 1.800.852.2217 (F) 1.800.492.8975
EiKO Global Canada, LLC: 81 King Street, Barrie, ON L4N 6B5 Canada (P) 1.888.410.8151 (F) 1.888.705.1335 | eiko.com