LH0407

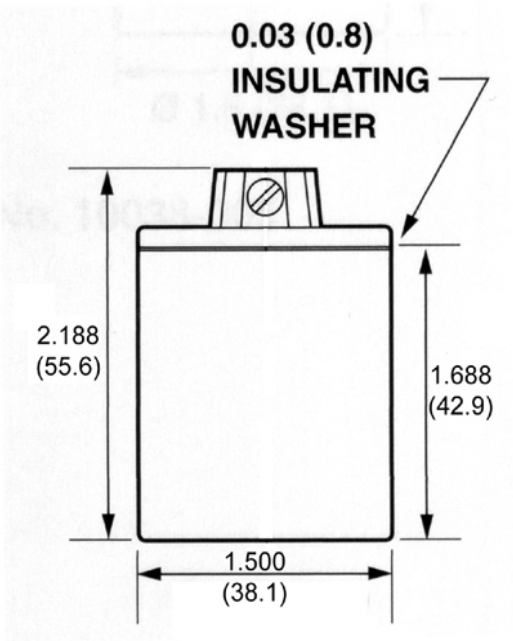

Status	Available
Case Qty	90 (sold individually)
Country of Origin	China
Certifications / Approvals	UL, CSA
Rated Wattage	660w
Rated Voltage	250v
Bulb Type	NA
Base Type	E26
Material	Unglazed Porcelain
Termination	#18AWG 105C 600v 24 wire leads
Wire Length	24