LH0630

G13 medium bipin

Application and Speicifications
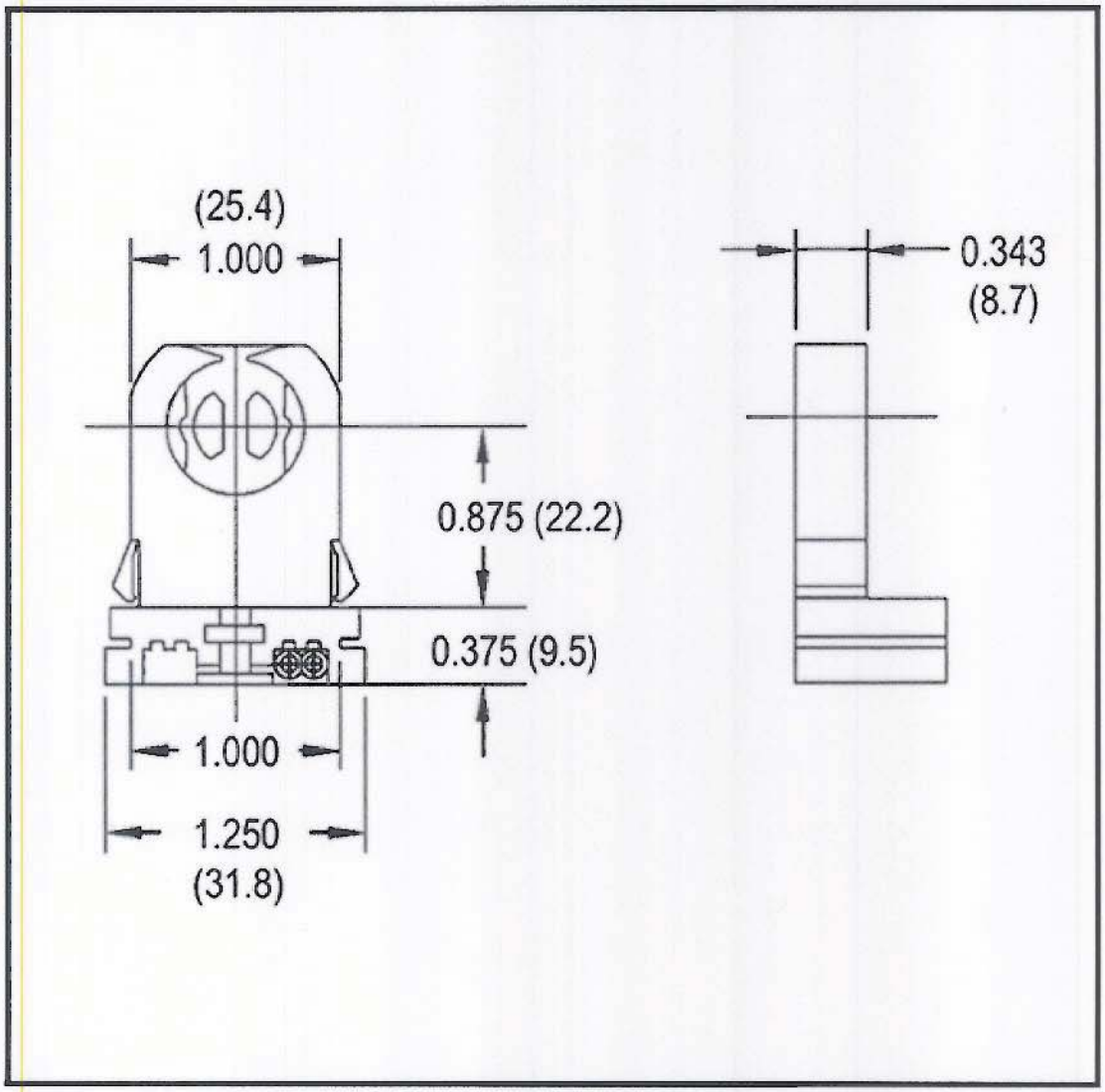
- 660w - 600v
- G13 medium bipin
- Shunted
- PBT GF
- Certification(s): cULus
- Lamp Axis: 22.2mm
- Push fit - Slide on - Screw down
- Quick Connects Shunted
- Overall Height: 1.663"