H&M Distributors

LH0760(26.290.4011 BJB)

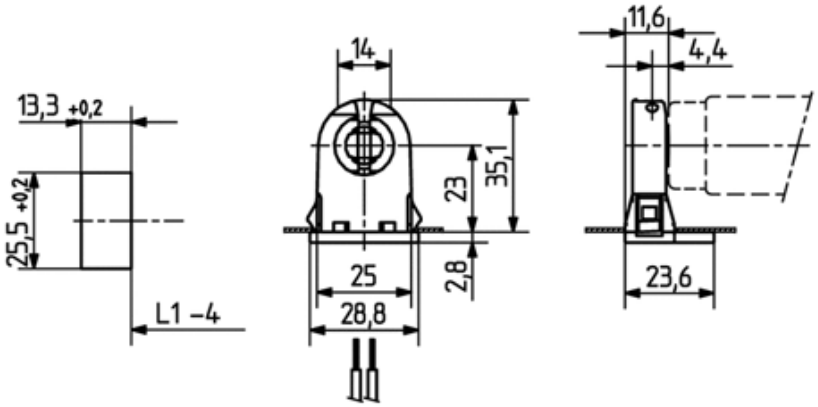

Model:	**LH0760**
Wattage:	**660W**
Voltage:	**600V**
Type:	**T8, T10, T12 SOCKET (UN-SHUNTED)**
Installation:	**SNAP-IN/PUSH-FIT MOUNTING & STOP/POST**