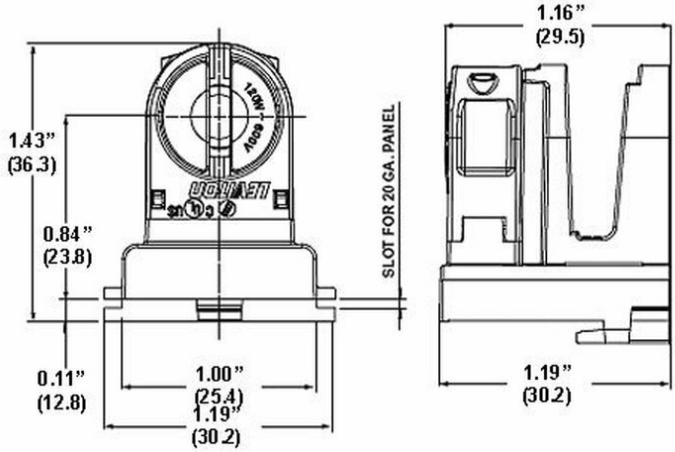

LH0875

PRODUCT DESCRIPTION

Unshunted, rotary locking T8-T12 to T5 converter lamp holder/socket with slide on mounting