Standard

STANDARD MAG BALLAST (1) F20T12 PH 120V

Available for many fluorescent lamp types sold today, including Preheat, Rapid Start, 2-pin CFL, Slimline, High Output, Very High Output and Circline. Magnetic ballasts can be used in any application where these lamps are used.

Product data

General Characteristics

Lamp Type	F20T12
Number of Lamps	1 piece
Input Voltage	120 V
Input Current (Operating)	0.28 A
Line Frequency	60 Hz
Lamp Footage(for sign ballast)	-
Ballast Type	Magnetic Fluorescent
Base Model	LO1322TP
Housing	X3
Housing Dimensions	3.06" x 1.44" x 1.81"
Housing Material	Metal
Suitable for Outdoor use?	Yes
Starting Method	Preheat
Family Name	Standard

Operating Characteristics

Automatic restart	Yes
Ignition time	1 s
Inp. Current (Open Circuit)	0
Input Current (Starting)	0.43
Input Power Gear	18 W
Ballast factor	0.78 -
Ballast Efficacy Factor	4.36 -
Power Factor	0.53
Lamp Current Crest Factor	1.5 -
Sound Rating	A
Max THD	15 %

Wiring Characteristics

Wire Striplength	0.50/0.375 mm
Lamp Connection	Series
Wire Gauge	18AWG
Wire Length by Color	See data sheet
Wire Type	Solid
Allowed Wiring Config(Remote)	Yes
Allowed Wiring Config(Tandem)	No
Allowed Wiring Config(Through)	No
Max Dist. Ball to Lamp(Remote)	30'
Max Dist. Ball to Lamp(Tandem)	-
Max Dist.Ball to Lamp(Through)	-

System Chars on driver level

Rated Lamp Watts	20W

Product Dimensions

Length A1	3.06 in
Length A2	2.75 in
Width B1	1.44 in
Height C1	1.81 in

Approval & Application Chars

EMC Immunity	FCC Non-Consumer
Approbation Marks	UL, CSA, RoHS
UL Listed	Yes
CSA certificate	Yes

PHILIPS

Standard

CEC Listing	No
Circle E logo	No
CSA E	No
cUL certificate	No
DOE	No
FIDE Certificate	No
NOM certificate	No
RoHS Compliant	Yes
SASO Certificate	No
UL Recognized	No

- Product Data

Product number	LO1322TPM
Full product name	MAG BALLAST (1) F20T12 PH 120V
Short product name	MAG BALLAST (1) F20T12 PH 120V
Pieces per Sku	1
eop_pck_cfg	72
Skus/Case	72
Bar code on pack	781087112823
Bar code on case	50781087003607
Logistics code(s)	913700509209
eop_net_weight_pp	0.250 kg

Dimensional drawing

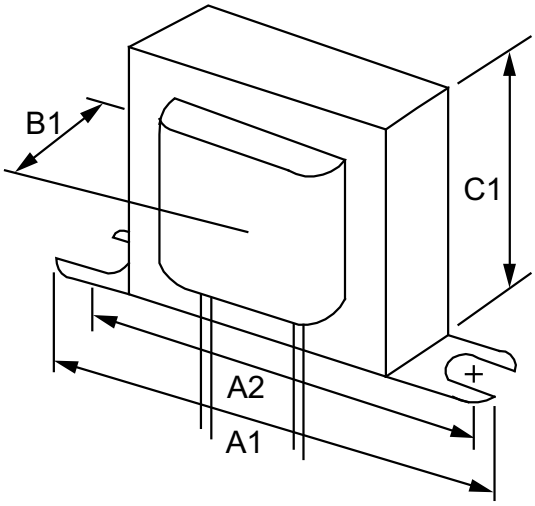

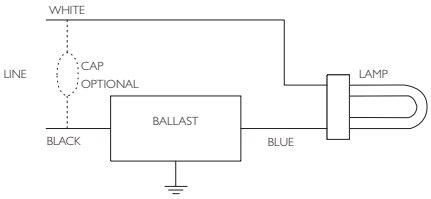

STANDARD MAG BALLAST (1) F20T12 PH 120V

Product	A1 (Norm)	A2 (Norm)	B1 (Norm)	C1 (Norm)	D1 (Norm)
MAG BALLAST (1) F20T12 PH 120V	3.06	2.75	1.44	1.81	-

© 2014 Koninklijke Philips N.V. (Royal Philips)
All rights reserved.

Specifications are subject to change without notice. Trademarks are the property of Koninklijke Philips N.V. (Royal Philips) or their respective owners.

www.philips.com/lighting

2014, February 1
data subject to change