PLT-12960 - LED CORN LAMP

PLT-12960 - 135/200/270W,
3000/4000/5000K, EX39 Base, 277-480V

DLC 5.1 Standard - PLTSNB321433

DIMENSIONS

EX39

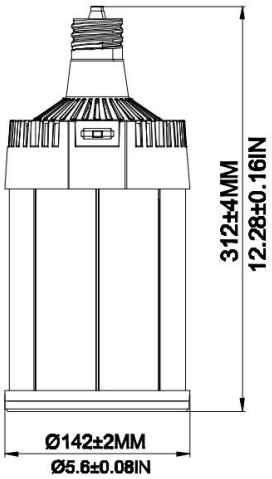

E39

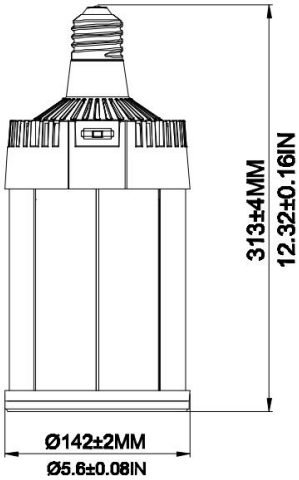

NPS-00087*

***Special Order, call 1-800-624-4488**

ADVANTAGE

- UL certificate.
- E39 EX39 lamp base.
- High CRI.
- Internal driver, input voltage 277-480VAC.
- Meet 4kV surge immunity level.
- Long lifespan and good heat dissipation ,With Sunon fan
- Two dimming options are available, continuous dimming or segmented dimmer
- Fits many different fixtures to replace traditional lamps.

NOTICE FOR USER

- Please turn off power before installation or maintenance.
- The input voltage of the fixture and lamps should match.
- Installation, service, and maintenance of luminaries should be performed by a qualified licensed electrician.
- Suitable for damp locations. Do not use with dimmers.
- Make sure to remove or bypass the ballast in the fixture before installing the lamp.
- Suitable for use in enclosed luminaires, min. Luminaire compartment dimensions: 470*380*380MM.

APPLICATION

- Replacement Lamps for Outdoor
- Pole/Arm-mounted Decorative Luminaires(Type B)

OPTICAL	Input Power (Tolerance : ±10%)	270W (135W/200W/270W via switch)		
	Color Temperature（Color Tunable）	3000K	4000K	5000K
	Lumen (Tolerance : ±10%)	41000 LM	43000 LM	42500 LM
	Efficacy (Tolerance : ±3%)	151 LM/W	159 LM/W	157 LM/W
	CRI	>80		
	Color Consistency	＜7 Steps (or ＜7 SDCM)		
	Diffuser Type	Clear PC		
	Beam Angle (50%) (Tolerance : ±25%)	280 Degree		
ELECTRICAL	Input Voltage and Frequency	277-487VAC, 50/60Hz		
	PF (Tolerance : -3%)	≥0.9		
	THD (Tolerance : +5%)	≤20%		
	Flicker Percent	＜30%		
	Driver Surge protection	L-N: 4kV		
	Dimmable	0-10V dimming standard (through manual knob on the lamp)		
	Equivalent	900W MHL/HPS/HID		
MATERIALS	LED Brand			
	LED Type	SMD2835		
	LED QTY	615 pcs of 3000K + 615 pcs of 5000K		
	Housing	PC + Aluminum		
	Housing Color	Any colors		
	Waterproof Rating	DAMP		
OTHERS	Operating Temperature	-40℃ TO 50℃		
	Storage Temperature	-40℃ TO 80℃		
	Operating Humidity	20％ - 70％ RH		
	Storage Humidity	10％ - 75％ RH		
	Warranty	5 years		

PACKAGE

	Carton Size	Qty / Carton	Net Weight / Carton	Gross Weight / Carton
Inner Carton	150*150*360 MM/5.9*5.9*14.2IN	1 PC	1.53KG/3.4lb	1.7KG/3.75lb
Outer Carton	470*320*375 MM/18.5*12.6*14.8IN	6 PCS	9.5KG/21.8lb	12.5KG/27.6lb

Tolerance of Outer Carton Size: ±5 MM/±0.59IN, Tolerance of Weight: ±10%.

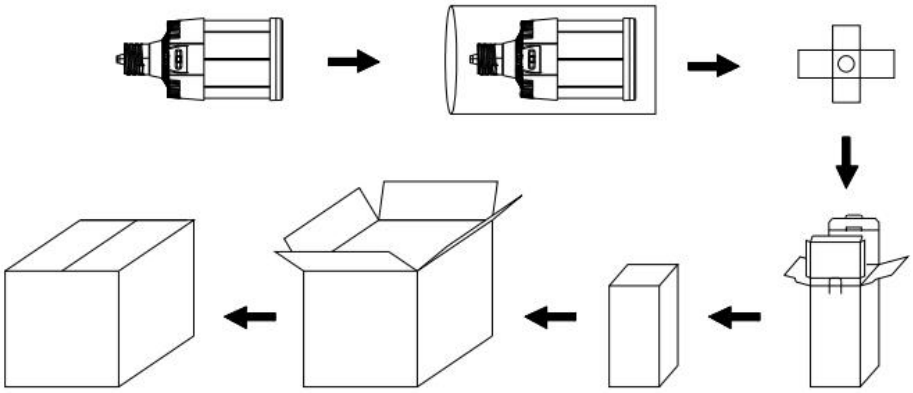

LIGHT DISTRIBUTION TESTING PARAMETERS

Remark: The testing data comes directly from the product test.

Luminaire Property

Luminaire Manufacturer:
Voltage: 278.0 V
Power: 262.10 W
Current: 0.990 A
Power Factor: 0.952

Photometric Results

CIE Class: General Diffuse
Total Rated Lamp Lumens: 43590.1 lm
Measurement Flux: 43590.1 lm
Efficiency: 100%
Downward Ratio: 50%
Upward Ratio: 50%
Horizontal Diffuse Angle(10%,50%): H330.9,H286.1
Vertical Diffuse Angle(10%,50%): V331.6,V285.5
Luminaire Efficacy Rating (LER): 166.36
Central Intensity: 363.44 cd
Max. Intensity: 5840.4 cd
Pos of Max. Intensity: H337.5 V96
S/MH(C0/C180): 5.47
S/MH(C90/C270): 5.29

Luminous Intensity Distribution Curve

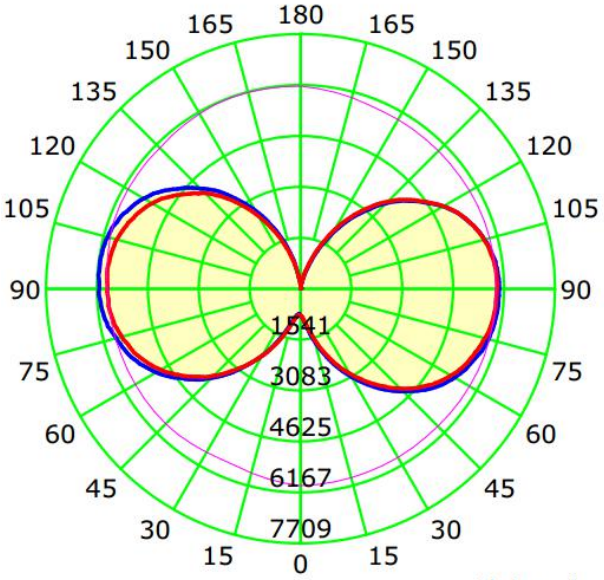

Unit: cd
Average Diffuse Angle(50%): 287.7°
C0-C180 C90-C270 G98

The Average Illuminance Effective Figure

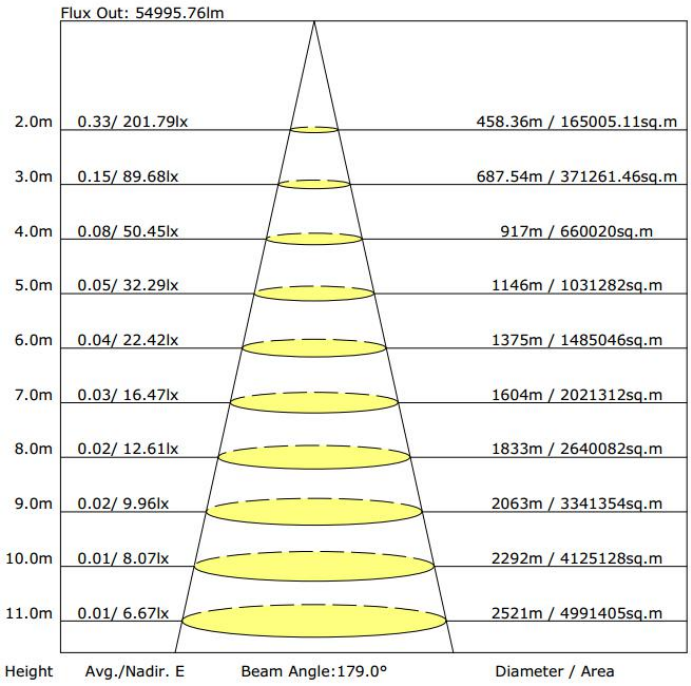

TROUBLESHOOTINGING

Problem	Solution
Flickering light	Turn off the power, then turn on again after 3 minutes. If the light continues to flicker, call a licensed electrician.
Light is not coming on	Check the electrical connection.