Product Specification	Document No.: Version：A0 Page： 1/2

model no.	PLT-50342

1. DESCRIPTION:

LAMP TYPE:	T8 U-bend
LAMP CLASSIFIED:	Type A+B, 5CCT, Gen3
BASE TYPE:	2G13 (Medium Bi-pin)
EQUIVALENT	/
WATTAGE:	11.5W/13W/15W
CCT:	3000K,3500K,4000K,5000K,6500K
DIFFUSER TYPE:	Internal coated glass tube
WARRANTY:	5 YEARS

2. PRODUCT FEATURES

- Replacement for conventional U bend fluorescent lamp
- Hybrid (Type A/B), 120-277Vac input
- UL (R/C and Classified) &DLC qualified
- Full glass housing: no aging, no yellowing, no bending
- Environmentally friendly: no mercury
- 5 Color temperature selectable

Suitable for dry and damp locations
Suitable for open fixtures

3. PERFORMANCE (If no specified, the test conditions in below items are: Ta=25℃±1℃, RH≤65%, air free.

3.1 Electrical Characteristics

PARAMETERS	SYMBOL	MIN	RATED	MAX	UNIT	Test Condition
Line voltage	Vin	--	120/277	--	V	/
Frequency	f	--	50/60	--	Hz	/
Rated power	P	-10%	11.5/13/15	10%	W	Vin=120,277Vac
Rated system power	Psys	-10%	16.5	13%	W	Vin=120,277Vac
Power factor	PF	-3%	0.9	--	/	Vin=120,277Vac
Total Harmonic Distortion	THD	--	20%	+5%	/	Vin=120,277Vac meet DLC
Starting time	t	--	--	1	s	Vin=120,277Vac
Flicker Percent	/	--	--	--	/	/
Dimming Type	/	Type A： Dependant on ballast				

3.2 Photometrical Characteristics

PARAMETERS	SYMBOL	MIN	RATED	MAX	UNIT	Test Condition
Beam Angle	Θ 10%	--	130	--	°	IES
Flux @<4000K	Φ	-10%	1700/1900/2100*	--	LM	Vin=120,277Vac
Flux @≥4000K		-10%	1800/2000/2200*	--		
System efficacy@<4000K	η	-10%	147/146/140*	--	LM/W	
System efficacy@≥4000K		-10%	156/153/146*	--		
System efficacy@<4000K	ηsys	-10%	127	--	lm/W	
System efficacy@≥4000K		-10%	133	--		

See Selectable Table on page 3 for full breakdown.

3.3 Color Characteristics (refer to ANSI C78.377-2015)

Chromaticity coordinates

CENTER POINT	CCT=3000K	X=0.4339 Y=0.4033	/
	CCT=3500K	X=0.4078 Y=0.3930	
	CCT=4000K	X=0.3818 Y=0.3797	
	CCT=5000K	X=0.3446 Y=0.3551	
	CCT=6500K	X=0.3123 Y=0.3283	

PARAMETER	SYMBOL	MIN	RATED	MAX	Unit	Test Condition
Color Render Index	Ra	80	82	--	/	/
R9	R9	0	12	--		
Color tolerance 3000K/6500K	/	--	--	5	SDCM	
Color tolerance 3500K/4000K/5000K	/	--	--	7	SDCM	

4. LUMEN MAINTENANCE &LIFE

PARAMETERS	SYMBOL	MIN	RATED	MAX	UNIT	Test Condition
Lumen Maintenance at 6000hrs	/	--	95.8%	--	/	/
Life	t	--	50000	--	Hrs	Ta=45C, air free
Warranty	/	--	5	--	Year	Ta=45C, air free

5. OPERATION TEMPERATURE & STORAGE TEMPERATURE

PARAMETERS	SYMBOL	MIN	RATED	MAX	UNIT	Test Condition
Ambient Temperature	T_A	-20	--	45	°C	/
Storage Temperature	Tst	-40	--	85		/

6. COMPATIBILITY

Compatible emergency drivers: PLTS-20116 & PLTS-20117
Compatible with select Instant Start ballasts (Type A), or operates directly off line voltage (Type B). See Ballast Compatibility list for list of compatible ballasts.

7. APPROBATION COMPLIANCE

Comply with UL 1993，FCC，DLC 5.1

8. DIMENSIONS

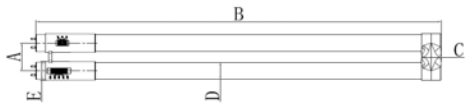

SYMBOL	MIN	TYP	MAX	UNIT
A	41.0	--	--	mm
B	565.2	--	574.0	mm
C	23.9	--	27.9	mm
D	23.9	--	26.3	mm
E	--	--	27.9	mm

9. Connection &Wiring

WIRING DIAGRAM	WIRING ILLUSTRATION
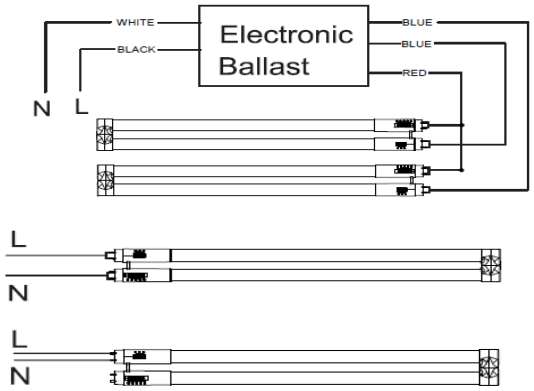	/

11. DLC

DLC #: PLTSPM136
DLC Level: 5.1 Standard

Selectable Table

Wattage	Kelvin	Lumens	LPW
11.5	3000	1700	147
	3500	1700	147
	4000	1800	156
	5000	1800	156
	6500	1800	156
13	3000	1900	146
	3500	1900	146
	4000	2000	153
	5000	2000	153
	6500	2000	153
15	3000	2100	140
	3500	2100	140
	4000	2200	146
	5000	2200	146
	6500	2200	146

Ballast Compatibility List

NC	Incompatible	

P	PF<0.85
T	THD >30%
C	Compatible
/	Not tested
NA	Not applicable

Ballast Brand	Part Number	Start Method	# of Lamps	BF		Lamp Connection	Enclosed fixtures?	N-1 Lamp			N Lamp		
								DMM			DMM		
				Type	Value			120Vac	277Vac	347Vac	120Vac	277Vac	347Vac
Philips-Advance	IOPA-2P32-N	IS	2	N	0.89	Parallel	YES	C	C	NA	C	C	NA
Philips-Advance	IOP-2P32-N	IS	2	N	0.89	Parallel	YES	C	C	NA	C	C	NA
Philips-Advance	IOP-2P32-LW-N	IS	2	L	0.77	Parallel	YES	C	C	NA	C	C	NA
OSRAM SYLVANIA	QTP 2X32T8/UNV ISN-SC □	IS	2	N	0.88	Parallel	YES	C	C	NA	C	C	NA
OSRAM SYLVANIA	QHE 2X32T8/UNV ISN-SC □	IS	2	N	0.88	Parallel	YES	C	C	NA	C	C	NA
OSRAM SYLVANIA	QHE 2X32T8/UNV ISL-SC □	IS	2	L	0.78	Parallel	YES	C	C	NA	C	C	NA
General Electric	GE-232-MV-N □	IS	2	N	0.88	Parallel	YES	C	C	NA	C	C	NA
General Electric	GE232MAX-N/ULTRA □	IS	2	N	0.88	Parallel	YES	C	C	NA	C	C	NA
Universal Lighting Technologies	B232IUNVHP-N	IS	2	N	0.88	Parallel	YES	C	C	NA	C	C	NA
Universal Lighting Technologies	B232IUNVEL-A	IS	2	L	0.77	Parallel	YES	C	C	NA	C	C	NA
Universal Lighting Technologies	B233IUNVHE-A	IS	2	N	0.87	Parallel	YES	C	C	NA	C	C	NA
ESPEN	VE232MVHIPE	IS	2	N	0.89	Parallel	YES	C	C	NA	C	C	NA
Philips-Advance	IOP-4P32-N	IS	4	N	0.87	Parallel	YES	C	C	NA	C	C	NA
Philips-Advance	IOP-4P32-LW-N	IS	4	L	0.77	Parallel	YES	C	C	NA	C	C	NA
General Electric	GE432MAX-L/ULTRA □	IS	4	L	0.78	Parallel	YES	C	C	NA	C	C	NA
OSRAM SYLVANIA	QHE 4X32T8/UNV ISN-SC □	IS	4	N	0.88	Parallel	YES	C	C	NA	C	C	NA
OSRAM SYLVANIA	QHE 4X32T8/UNV ISL-SC □	IS	4	L	0.78	Parallel	YES	C	C	NA	C	C	NA
HOWARD INDUSTRIES	EP3/32IS/MV/SC/HE	IS	3	N	0.87	Parallel	YES	C	C	NA	C	C	NA
HOWARD INDUSTRIES	EPL4/32IS/MV/MC/HE	IS	4	L	0.77	Parallel	YES	C	C	NA	C	C	NA
ProLume	EP232IS/L/MV/SL	IS	2	L	0.78	Parallel	YES	C	C	NA	C	C	NA
Prolume	E432IS/120/R/SL	IS	4	N	0.87	Parallel	YES	P,T	NA	NA	P,T	NA	NA
General Electric	GE432MAX-G-N	IS	4	N	0.88	Parallel	YES	C	C	NA	C	C	NA
Universal Lighting Technologies	B432IUNVHE L-A	IS	4	L	0.77	Parallel	YES	C	C	NA	C	C	NA
General Electric	GE132MAXP-N/ULTRA	IS	1	N	0.88	NA	YES	NA	NA	NA	C	C	NA
OSRAM SYLVANIA	QHE 1X32T8/UNV ISN-SC	IS	1	N	0.88	NA	YES	NA	NA	NA	C	C	NA
OSRAM SYLVANIA	QHE 1X32T8/UNV ISL-SC	IS	1	L	0.78	NA	YES	NA	NA	NA	C	C	NA
ESPEN	VE232MVHIPLE	IS	2	L	0.77	Parallel	YES	C	C	NA	C	C	NA
Philips-Advance	REB-2P32-SC	IS	2	N	0.88	Parallel	YES	C	C	NA	C	C	NA
General Electric	GE232MV-N-DIY	IS	2	N	0.88	Parallel	YES	C	C	NA	C	C	NA
Halco	EP232IS/MV/HE	IS	2	N	0.88	Parallel	YES	C	C	NA	C	C	NA

MAXLITE	SKEU322HEL/SC	IS	2	L	0.77	Parallel	YES	C	C	NA	C	C	NA
General Electric	GE332MV-N	IS	3	N	0.87	Parallel	YES	C	P	NA	C	P	NA
General Electric	GE332MAX-N/ULTRA	IS	3	N	0.88	Parallel	YES	C	P	NA	C	P	NA
General Electric	GE332MAX-L/ULTRA	IS	3	L	0.78	Parallel	YES	C	C	NA	C	C	NA
General Electric	GE332MAX-G-N	IS	3	N	0.87	Parallel	YES	C	C	NA	C	C	NA
OSRAM SYLVANIA	QTP 3X32T8/UNV ISN-SC	IS	3	N	0.88	Parallel	YES	C	C	NA	C	C	NA
OSRAM SYLVANIA	QHE 3X32T8/UNV ISN-SC	IS	3	N	0.88	Parallel	YES	C	C	NA	C	C	NA
OSRAM SYLVANIA	QHE 3X32T8/UNV ISL-SC	IS	3	L	0.78	Parallel	YES	C	C	NA	C	C	NA
Universal Lighting Technologies	B332IUNVHP-A	IS	3	N	0.88	Parallel	YES	C	C	NA	C	C	NA
MAXLITE	SKEU324HE/SC	IS	4	N	0.88	Parallel	YES	C	C	NA	C	C	NA
MAXLITE	SKEU323L/SC	IS	3	L	0.78	Parallel	YES	C	C	NA	C	C	NA
Halco	EP332IS/MV/HE	IS	3	N	0.87	Parallel	YES	C	C	NA	C	C	NA
Universal Lighting Technologies	B432IUNVHP-A	IS	4	N	0.88	Parallel	YES	C	C	NA	C	C	NA
Halco	EP432IS/MV/HE	IS	4	N	0.88	Parallel	YES	C	C	NA	C	C	NA
Halco	EP432IS/L/MV/HE	IS	4	L	0.78	Parallel	YES	C	C	NA	C	C	NA
Philips-Advance	REB-4P32-SC	IS	4	N	0.81	Parallel	YES	C	NA	NA	C	NA	NA
General Electric	GE432-120-RES	IS	4	N	0.83	Parallel	YES	C	NA	NA	C	NA	NA
General Electric	GE432MAX-N/ULTRA	IS	4	N	0.88	Parallel	YES	C	C	NA	C	C	NA
General Electric	GE432MAX347-N	IS	4	N	0.94	Parallel	YES	NA	NA	C	NA	NA	C
MAXLITE	MLEU322HEL/SC	IS	2	N	0.83	Parallel	YES	C	C	NA	C	C	NA
Universal Lighting Technologies	B232I120RES-A	IS	2	N	0.88	Parallel	YES	C	NA	NA	C	NA	NA
HOWARD INDUSTRIES	E2/32IS-120MC	IS	2	N	0.85	Parallel	YES	P,T	NA	NA	P,T	NA	NA
HOWARD INDUSTRIES	EPL2/32IS/MV/MC/HE	IS	2	L	0.78	Parallel	YES	C	P,T	NA	C	C	NA
PLUSRITE	BAF232IS/MV	IS	2	N	0.89	Parallel	YES	C	C	NA	C	C	NA
EIKO	PM-2X32T8-UNV-IS-L	IS	2	L	0.77	Parallel	YES	C	C	NA	C	C	NA
EIKO	PM-3X32T8-UNV-IS	IS	3	N	0.87	Parallel	YES	C	C	NA	C	C	NA
Philips-Advance	IOP-2PSP32-N	PS	2	N	0.94	Parallel	No	C	C	NA	C	C	NA
Philips-Advance	IOP-3PSP32-SC	PS	3	N	0.88	Parallel	No	C	C	NA	C	C	NA
Philips-Advance	IOP-3PSP32-LW-SC	PS	3	L	0.69	Parallel	No	C	C	NA	C	C	NA
Philips-Advance	IOP-4PSP32-LW-SC	PS	4	L	0.69	Parallel	No	C	C	NA	C	C	NA
OSRAM SYLVANIA	QHE 4X32T8/UNV PSX-SC	PRS	4	L	0.71	Parallel	No	C	C	NA	C	C	NA
Universal Lighting Technologies	B432PUNVHE-A	PS	4	N	0.87	Parallel	No	C	C	NA	C	C	NA
General Electric	GE232-MVPS-N	PS	2	N	0.88	Parallel	No	C	C	NA	C	C	NA
Universal Lighting Technologies	B232PUNVHE-B	PS	2	N	0.88	Parallel	No	C	P	NA	C	C	NA
OSRAM SYLVANIA	QHE 2X32T8/UNV PSN-MC	PRS	2	N	0.88	Parallel	No	C	C	NA	C	C	NA
Universal Lighting Technologies	B332PUNVHE-A	PS	3	N	0.88	Parallel	No	C	C	NA	C	C	NA
OSRAM SYLVANIA	QHE 4X32T8/UNV PSN-SC	PRS	4	N	0.88	Parallel	No	C	C	NA	C	C	NA
General Electric	GE-232-MV-PS-N	PS	2	N	0.88	Parallel	No	C	C	NA	C	C	NA
SUNPARK	U-1/32PSE	PS	1	N	0.88	n.a	No	NA	NA	NA	C	C	NA

Superior Life	70211	?	4	N	0.87	Parallel	No	C	C	NA	C	C	NA
Philips-Advance	REZ-2S32-SC	DPS	2	N	/	Parallel	Yes	C	C	NA	C	C	NA
EIKO	PM-3X32T8-UNV-IS-L	IS	3	L	0.78	Parallel	YES	C	C	NA	C	C	NA
HOWARD INDUSTRIES	EPL3/32IS/MV/SC/HE	IS	3	L	0.78	Parallel	YES	C	C	NA	C	C	NA
PLUSRITE	BAF332IS/MV	IS	3	N	0.88	Parallel	YES	C	C	NA	C	C	NA
TCP	E3P32ISUNVLE	IS	3	L	0.78	Parallel	YES	P	C	NA	P	C	NA
TCP	E4P32ISUNVE	IS	4	N	0.88	Parallel	YES	C	C	NA	C	C	NA
HOWARD INDUSTRIES	EP4/32IS/MV/MC/HE	IS	4	N	0.88	Parallel	YES	C	C	NA	C	C	NA
EIKO	PM-4X32T8-UNV-IS	IS	4	N	0.88	Parallel	YES	C	C	NA	C	C	NA
EIKO	PM-4X32T8-UNV-IS-L	IS	4	L	0.78	Parallel	YES	C	C	NA	C	C	NA
Universal Lighting Technologies	B132IUNVHP-N	IS	1	N	0.88	NA	YES	NA	NA	NA	C	C	NA
SOLA	E-758-U-232-MC	IS	2	N	0.88	Parallel	YES	C	P	NA	C	C	NA
HOWARD INDUSTRIES	EP2/32IS/MV/MC/HE	IS	2	N	0.89	Parallel	YES	C	C	NA	C	C	NA
HOWARD INDUSTRIES	EP3／32IS／MV／MC／HE	IS	3	N	0.88	Parallel	YES	C	C	NA	C	C	NA
WORK HORSE	WHSG4-UNV-T8-IS	IS	4	N	0.96	Parallel	YES	C	C	NA	C	C	NA
KEYSTONE	KTEB-432RIS-1-TP-SL	IS	4	N	0.80	Parallel	YES	P,T	NA	NA	P,T	NA	NA
SUNPARK	120-1/32IS HPF	IS	1	N	0.88	NA	YES	NA	NA	NA	C	NA	NA
Superior Life	70201	IS	2	N	0.88	Parallel	YES	C	T	NA	C	C	NA
SUNPARK	U-2/32ISE-LBF	IS	2	L	0.78	Parallel	YES	C	C	NA	C	C	NA
SUNPARK	U-3/32ISE	IS	3	N	0.88	Parallel	YES	C	C	NA	C	C	NA
SUNPARK	120-3/32IS MPF	IS	3	N	0.88	Parallel	YES	C	NA	NA	C	NA	NA
SUNPARK	U-4/32IS HP,F	IS	4	N	0.88	Parallel	YES	C	C	NA	C	C	NA
SUNPARK	U-4/32ISE-LBF	IS	4	L	0.77	Parallel	YES	C	C	NA	C	C	NA
EIKO	PM-2X32T8-UNV-IS	IS	2	N	0.87	Parallel	YES	C	C	NA	C	C	NA
KEYSTONE	KTEB-332-UV-IS-N-P	IS	3	N	0.87	Parallel	YES	C	C	NA	C	C	NA
KEYSTONE	KTEB-432-UV-IS-N-P	IS	4	N	0.87	Parallel	YES	C	C	NA	C	C	NA
General Electric	GE432MAXP-H/ULTRA □	IS	4	H	1.18	Parallel	NO	C	C	NA	C	C	NA
Halco	EP232IS/L/MV/HE	IS	2	L	0.78	Parallel	YES	C	C	NA	C	C	NA
Philips-Advance	VEL-2P32-SC	IS	2	N	0.88	Parallel	YES	NA	C	NA	NA	C	NA
Universal Lighting Technologies	B232IUNVHP-B	IS	2	N	0.88	Parallel	YES	C	C	NA	C	C	NA
OSRAM SYLVANIA	QTP2x32T8/277 ISN-D	IS	2	L	0.78	Parallel	YES	NA	C	NA	NA	C	NA
KEYSTONE	KTEB-232LBF-1-TP-PIC-EV	IS	2	N	0.88	Parallel	YES	C	NA	NA	C	NA	NA
HATCH	HL232BIS/UV/HE/W	IS	2	N	0.9	Parallel	YES	C	C	NA	C	C	NA
HATCH	HL432BIS/UV/HE/W	IS	4	N	0.9	Parallel	YES	C	P	NA	C	C	NA
ARCATA	ACT 3P32ISUNVLE	IS	3	L	0.78	Parallel	YES	C	C	NA	C	C	NA
LIGHTING PRODUCTS LIMITED	EB-332EBF-UV-TP-HE	IS	3	L	0.78	Parallel	YES	C	C	NA	C	C	NA
TOPAZ	B432IUNVHEH/A-TPZ	IS	4	H	1.18	Parallel	NO	C	C	NA	C	C	NA
DAMAR	EL232-120/277HF(1688B)	IS	2	N	/	Parallel	NO	C	C	NA	C	C	NA
DAMAR	EL332-120/277HF(3654C)	IS	3	N	/	Parallel	NO	C	C	NA	C	C	NA

DAMAR	EL432-120/277HF(3093B)	IS	4	N	/	Parallel	NO	C	C	NA	C	C	NA
Plusrite	BAF232IS/MV/L	IS	2	L	0.78	Parallel	YES	C	C	NA	C	C	NA
Plusrite	BAF332IS/MV/L	IS	3	L	0.78	Parallel	YES	C	C	NA	C	C	NA
Plusrite	BAF432IS/MV	IS	4	N	0.88	Parallel	YES	C	C	NA	C	C	NA
Plusrite	BAF432IS/MV/L	IS	4	L	0.78	Parallel	YES	C	C	NA	C	C	NA
Watran	DB-232N-MV-TP-HE	IS	2	N	0.87	Parallel	YES	C	C	NA	C	C	NA
Watran	DB-332N-MV-TP-HE	IS	3	N	0.87	Parallel	YES	C	C	NA	C	C	NA
Watran	DB-432N-MV-TP-HE	IS	4	N	0.87	Parallel	YES	C	C	NA	C	C	NA
Watran	DB-432L-MV-TP-HE	IS	4	L	0.77	Parallel	YES	C	C	NA	C	C	NA
Watran	DB-232N-MV-TP-HE（SC）	IS	2	N	0.87	Parallel	YES	C	C	NA	C	C	NA
ACT	ACT 2P32ISUNVE	IS	2	N	0.89	Parallel	YES	C	C	NA	C	C	NA
ANTRON ELECTRONICS	A32T8MICLO	IS	2	L	0.78	Parallel	YES	C	C	NA	C	C	NA
OSRAM SYLVANIA	QTP 2X32T8/UNV ISL-SC	IS	2	L	0.78	Parallel	YES	C	C	NA	C	C	NA
Philips-Advance	IOPA-4P32-SC	IS	4	N	0.92	Parallel	YES	C	C	NA	C	C	NA
Universal Lighting Technologies	B432IUNVHE-A	IS	4	N	0.87	Parallel	YES	C	C	NA	C	C	NA
General Electric	GE332MAXP-L/ULTRA	IS	3	L	0.77	Parallel	YES	C	C	NA	C	C	NA
Universal Lighting Technologies	B232I277RH-A	IS	2	H	1.09	Parallel	NO	NA	P,T	NA	NA	C	NA
Pacific Flourescent	EB-232IS-120-RES	IS	2	N	/	Parallel	YES	C	NA	NA	C	NA	NA
Philips-Advance	ICN-132-MC	IS	1	N	0.88	NA	YES	NA	NA	NA	C	C	NA
ESPEN	VE2P32MVHIPE	IS	2	N	0.89	Parallel	YES	C	C	NA	C	C	NA
General Electric	GE232MAX-G-N	IS	2	N	0.88	Parallel	YES	C	C	NA	C	C	NA
Cooper Lighting	CL-432ISUNV-R1-B	IS	4	N	0.88	Parallel	NO	C	C	NA	C	C	NA
Philips-Advance	ICN-3P32-SC	IS	3	N	0.89	Parallel	YES	C	C	NA	C	C	NA
Philips-Advance	VEL-3P32-SC	IS	3	N	0.88	Parallel	YES	C	C	NA	C	C	NA
SYLVANIA	QT 3x32/277 IS	IS	3	N	0.9	Parallel	YES	C	C	NA	C	C	NA
Philips-Advance	ICN-2P32-SC	IS	2	N	0.89	Parallel	YES	C	C	NA	C	C	NA
Philips-Advance	IOPA-2P32-LW-N	IS	2	L	/	Parallel	YES	C	C	NA	C	C	NA
SYLVANIA	QT 2x32277 IS-SC	IS	2			Parallel	YES	C	C	NA	C	C	NA
Philips-Advance	IOP-1P32-LW-N	IS	1	L	0.77	NA	YES	NA	NA	NA	C	P	NA
Philips-Advance	IOP-1P32-SC	IS	1	N	0.87	NA	YES	NA	NA	NA	C	C	NA
Philips-Advance	IOP-2P32-LW-SC	IS	2	L	0.77	Parallel	YES	C	C	NA	C	C	NA
Universal Lighting Technologies	B132IUNVEL-A	IS	1	L	0.77	NA	YES	NA	NA	NA	C	C	NA
Universal Lighting Technologies	B432I347HE-A	IS	4	N	0.88	Parallel	YES	NA	NA	C	NA	NA	C
SYLVANIA	QT 4X32/347LP	IS	4	/	/	Parallel	YES	NA	NA	T	NA	NA	T
Philips-Advance	IOP-1P32-LW-SC	IS	1	L	0.77	NA	YES	NA	NA	NA	C	C	NA
KEYSTONE	KTEB-432-UV-IS-N-P-EMI	IS	4			Parallel	YES	C	C	NA	C	C	NA
ESPEN	VE4P32MVHIPE	IS	4			Parallel	YES	C	C	NA	C	C	NA
MOTOROLA	M2-IN-T8-GP-D-277	IS	2			Parallel	YES	NA	C	NA	NA	C	NA
FUSION	FB432347E-N	IS	4	N	0.88	Parallel	YES	NA	NA	C	NA	NA	C

FUSION	FB232347E-N	IS	2	N	0.88	Parallel	YES	NA	NA	C	NA	NA	C
FUSION	FB232MVE-N	IS	2	N	0.88	Parallel	YES	C	C	NA	C	C	NA
FUSION	FB432MVE-N	IS	4	N	0.88	Parallel	YES	C	C	NA	C	C	NA
Philips-Advance	REZ-3S32-SC	DPS	3	N	0.97	Series	Yes	NA	NA	NA	C	NA	NA