ELite-LED XL

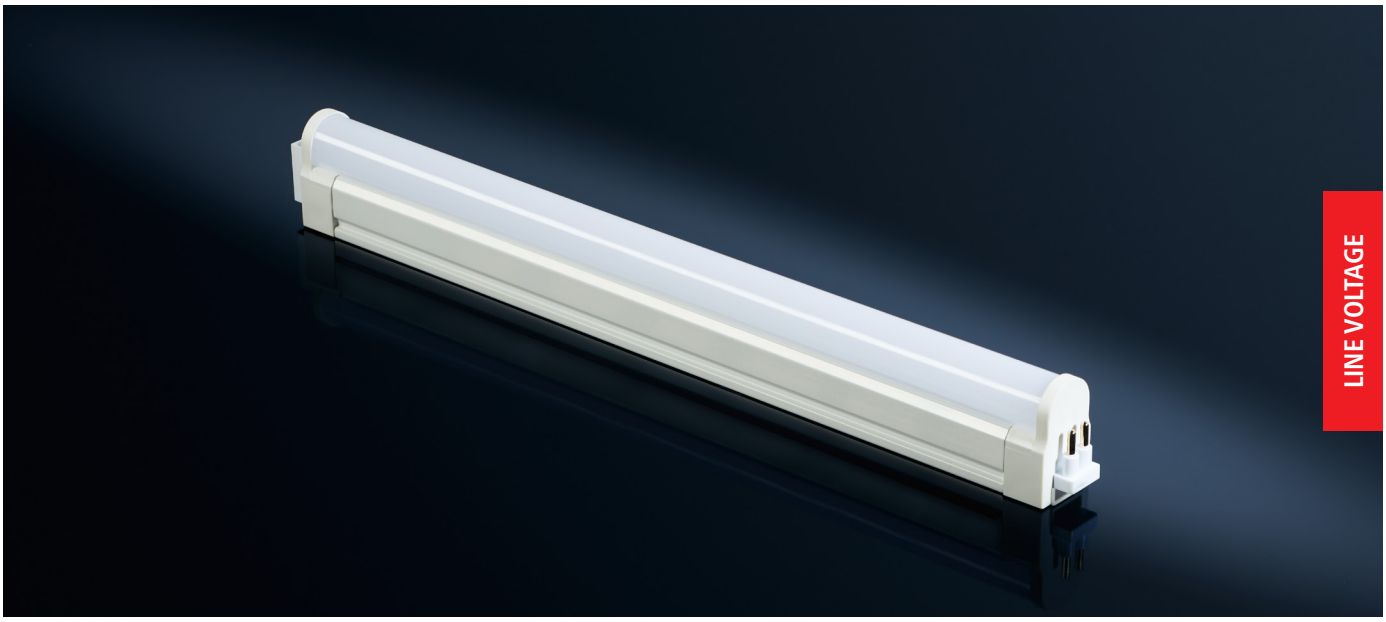

Product Description

The Most Cost-Effective Way to Upgrade from Fluorescent to LED

ELite-LED XL is a light fixture with integrated electronic driver. It uses the same connecting system as our SlimLite T4 and SlimLite XL T5 fluorescent light fixtures, allowing for an easy LED upgrade. ELite-LED XL has the same brightness as T5 fluorescents but uses half the energy and has double the lifespan.

Product Features

- Available sizes:
  - 1′ (5 W)
  - 2′ (7.5 W)
  - 3′ (9 W)
  - 4′ (12 W)
  - 5′ (14 W)
- Available color temperatures:
  - 3000 K
  - 4000 K
  - Additional color temperatures (special order)
- 120 Vac LED with integrated electronic driver
- Finish: White housing with frosted lens
- Fixtures can interconnect with direct connectors or accessory cables
- Interconnect up to 500 W in a single run
- Optional hardwire box available
- Magnetic mounting clips are available
- EPH certified to NSF/ANSI 2 for use in food zones
- 50,000 hours usable life
- Good CRI >80
- Efficacy: 122-150 lm/W

Available Options

Necessary Accessories on Page 15

MODEL	LENGTH	POWER	LIGHT OUTPUT	EFFICACY	CRI	MAX CONNECTED	PART NO. (3000 K)	PART NO. (4000 K)
ELite-LED XL 1′	11"	5 W	649 Lm	122 lm/W	>80	100 pcs	EL/LED/12/3000/XL	EL/LED/12/4000/XL
ELite-LED XL 2′	21 3/16"	7.5 W	949 Lm	126 lm/W	>80	55 pcs	EL/LED/22/3000/XL	EL/LED/22/4000/XL
ELite-LED XL 3′	33"	9 W	1296 Lm	144 lm/W	>80	41 pcs	EL/LED/34/3000/XL	EL/LED/34/4000/XL
ELite-LED XL 4′	44 13/16"	12 W	1644 Lm	137 lm/W	>80	33 pcs	EL/LED/46/3000/XL	EL/LED/46/4000/XL
ELite-LED XL 5′	56 5/8"	14 W	1991 Lm	142 lm/W	>80	27 pcs	EL/LED/59/3000/XL	EL/LED/59/4000/XL

Dimensions

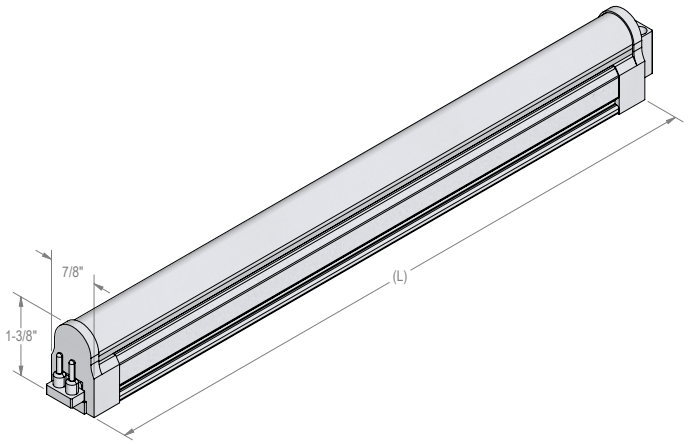

Line Voltage Accessories

ELite-LED XL / ELite-LED XL HO

Power Cords

FINISH	LENGTH	PART NO.
White	6"	SPC6/XL
White	12"	SCP12/XL
White	24"	SPC24/XL
White	72"	SPC/XL/R
White	120"	SPC/120/XL/R
White	144"	SPC/144/XL/R
White	240"	SPC/240/XL/R
White, Straight connector	24"	SPC24/STC
White, Straight connector	48"	SPC48/STC
White, Straight connector	72"	SPC72/STC
White, Straight connector	144"	SPC144/STC
White, with switch	72"	SPC/S/XL/R

Connecting Cables

FINISH	LENGTH	PART NO.
White	6"	SCC6/XL/R
White	12"	SCC12/XL/R
White	18"	SCC18/XL/R
White	24"	SCC24/XL/R
White	48"	SCC48/XL/R
White	72"	SCC72/XL/R
White	120"	SCC120/XL/R
White	240"	SCC240/XL/R
White, direct connector		SDC/XL/R

Connecting Cables, Straight Plugs

FINISH	LENGTH	PART NO.
White	12"	SCC12/STC
White	24"	SCC24/STC
White	48"	SCC48/STC
White	72"	SCC72/STC

Optional Accessories

ACCESSORIES	PART NO.
Hardwire Box	SHWC/XL/R
Hardwire Box, switch	SHWC/S/XL/R
Mounting Clip with screw	SMC/XL/Metal
Magnetic mounting clip, swivel, 0-45	EL/LED/MC/SMS/XL