RADIUS SERIES - TSR

High Output LED Emergency Lighting Unit

PROJECT:
FIXTURE TYPE:
LOCATION:
CONTACT/PHONE:

PRODUCT DESCRIPTION

The efficient Radius Series TSR high-power LED emergency lighting unit provides industry leading 125' path of egress spacing. Suited for larger areas and egress paths such as warehouses, factories, lengthy corridors, large department store retailers and schools. This series eliminates the need for multiple emergency lighting units.

PRODUCT SPECIFICATIONS

Construction

Precision molded unit and lamp housings constructed of UV-stable UL 5VA flame-retardant, corrosion-resistant thermoplastic. Units resist denting, peeling, scratching and corrosion. Tool-less access provided for easy maintenance. White or black textured finish.

Electrical

Dual 120/277 voltage standard • Rated for use in damp locations • Solid state charging and switching • Brownout protection • Battery low voltage disconnect • Overload and short circuit protection • AC power indicator and test switch

Illumination

Two fully adjustable, recessed lamp heads allow for maximum light to be delivered to the path of egress. Fixtures are supplied with high-powered LED lamp optics that deliver up to 125' on center spacing (high-output TSR-HO Series) with up to 1100 total lumens output. The standard TSR unit delivers up to 70' on center spacing with 520 total lumens output. The LEDs have an estimated life over 50,000 hours with normal use.

LiFePO4 (Lithium Phosphate) Battery

LiFePO4 batteries are environmentally friendly as well as thermally and chemically stable which makes them one of the safest batteries to use. With an extremely low discharge rate and high-power density the unit is able to provide unsurpassed performance. A fully charged pack will disconnect from the charging circuit, drawing no power. This feature significantly reduces the amount of wasted power when multiplied by the number of units installed. The cells' chemistry allows for environmentally friendly disposal making it one of the "greenest" energy sources available. LiFePO4 batteries perform optimally in temperatures ranging from 0°C to 40°C (32°F to 104°F).

- 9.6V LiFePO4 battery
- 90 minutes of illumination upon loss of AC Power
- 24-Hour Recharge

Code Compliance

The Radius TSR Series is UL Listed and meets or exceed the following: California Energy Commission (CEC) Title 20 Standard, UL 924, cUL (CSA C22.2 No 141-15) , NEC requirements and NFPA 101.

Warranty

5-year warranty on housing and electronics. 1-year on battery. Product specifications subject to change without notice.

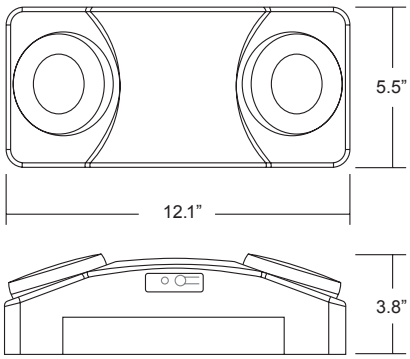

TSR Unit shown with WLVR-2 Weatherproof Enclosure

INSTALLATION

Mounting

A universal J-box mounting pattern and rear keyhole slots are provided for wall or ceiling mounting. Optional I-beam mounting bracket is available for mounting to poles, I-beams or strut metal framing.

ORDERING INFORMATION

model	color	options	accessories
TSR = (2) 2.7W LED Lamps	W = White	SD = Self Diagnostics	BGR-1 = Polycarbonate Vandal Shield
TSR-HO = (2) 5.4W LED Lamps	B = Black	REM[1] = Remote Capable	WWG1 = Wire Guard (White Finish)
			WG-STI-9644 = Wire Guard (White Powdercoat Finish)
			IBM = I-Beam Mounting Bracket
			WLVR-2 = Wet Location/Vandal Guard (Back Mount)

NOTE: [1]TSR- 2.7 Watts of remote capabilities

Ordering Example TSR-HO-W-SD

Mule Lighting , Inc. 46 Baker Street Providence, RI 02905 800 556-7690 P 401 941-2929 F www.mulelighting.com

RADIUS SERIES - TSR

High Output LED Emergency Lighting Unit

PROJECT:
FIXTURE TYPE:
LOCATION:
CONTACT/PHONE:

Using multiple TSR units (2.7 Watts lamps) mounted at a typical 7.5' height delivers 70' on center spacing with a 3' wide path of egress.

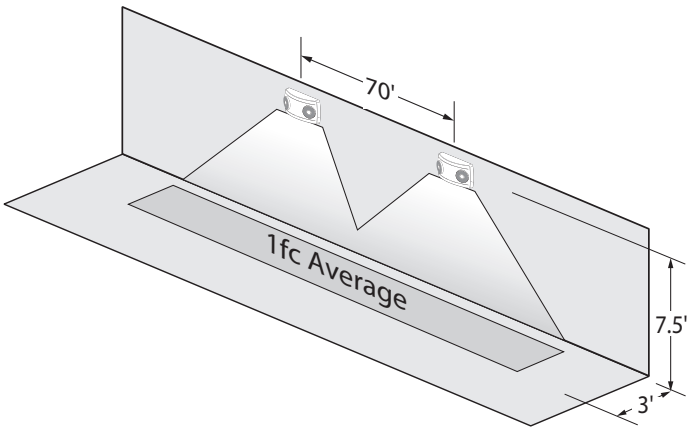

Using multiple TSR-HO units (5.4 Watts lamps) mounted at a typical 7.5' height delivers 125' on center spacing with a 3' wide path of egress.

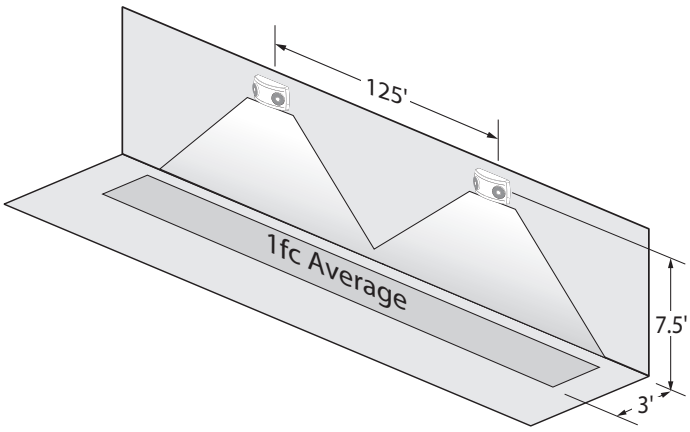

Using multiple TSR units (2.7 Watts lamps) mounted at a typical 7.5' height delivers 63' on center spacing with a 6' wide path of egress.

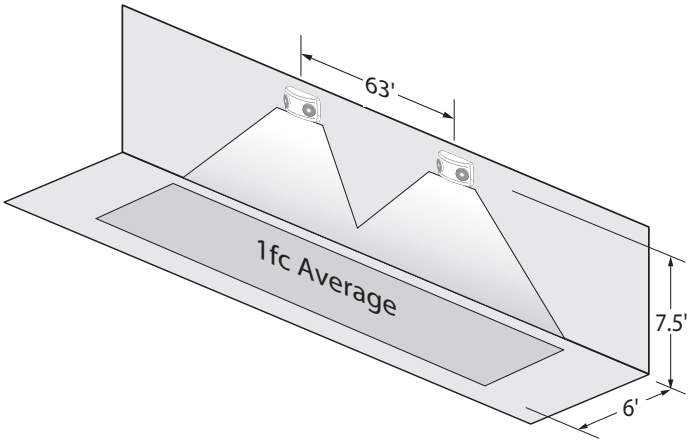
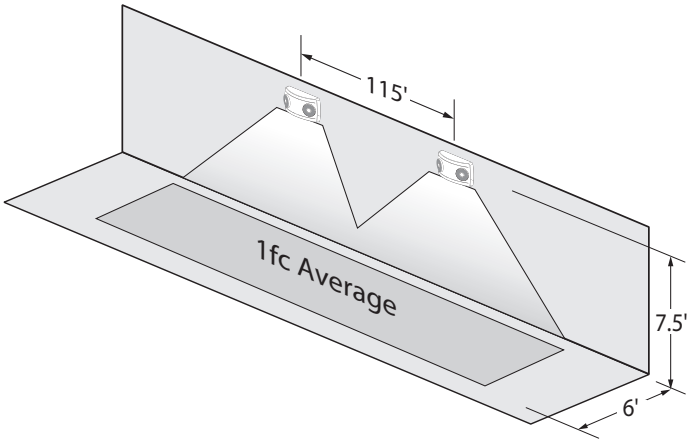
Using multiple TSR-HO units (5.4 Watts lamps) mounted at a typical 7.5' height delivers 115' on center spacing with a 6' wide path of egress.