G13 Push-through Lampholders for T8, T12 Lamps

Lampholders for fluorescent lamps T8 and T12 / Medium Bi-Pin

Nominal rating: 660 W/600 V
Push-in twin terminals: 18 AWG, solid or stranded conductors, tinned
Lateral fixing clips for wall thickness 0.4–2 mm (0.016"–0.079")

All products in this chapter carry a T rating of T140 acc. to IEC standards

G13 push-through lampholders for lamps T8, T12
With straight insertion
Casing: PBT GF, white, cover plate: PBT GF, white
Lamp axis: 23 mm (0.906")
Weight: 6.5 g, unit: 1000 pcs.
Type: 01000 with stop
Ref. No.: 537105
Ref. No.: 537107 internally shunted
Type: 01001 without stop
Ref. No.: 537106
Ref. No.: 537108 internally shunted

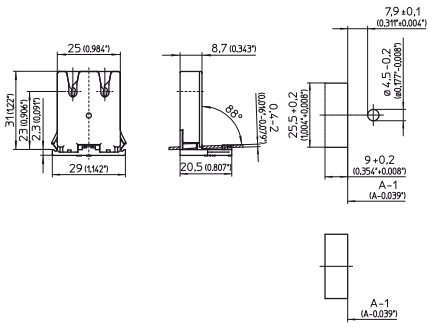

G13 push-through lampholders for lamps T8, T12
Pin support for reliable contact
Lamp axis: 31 mm (1.220")
Weight: 7.8 g, unit: 1000 pcs.
Type: 28700/28725 with stop
Ref. No.: 109342
Ref. No.: 109376 internally shunted
Type: 28701/28726 without stop
Ref. No.: 109343
Ref. No.: 109377 internally shunted

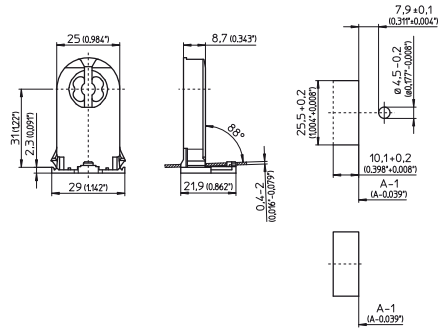

G13 push-through lampholders for lamps T8, T12
Pin support for reliable contact
Lamp axis: 23 mm (0.906")
Weight: 6.6 g, unit: 1000 pcs.
Type: 29100/29125 with stop
Ref. No.: 109346
Ref. No.: 109371 internally shunted
Type: 29101/29126 without stop
Ref. No.: 109529
Ref. No.: 109372 internally shunted

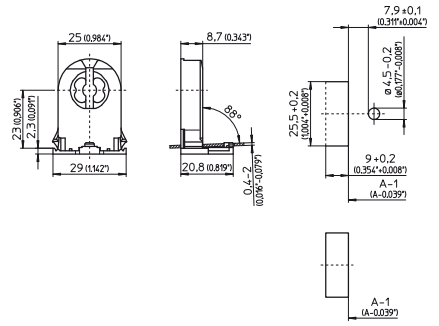
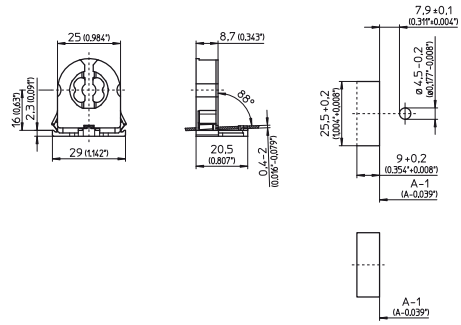
G13 push-through lampholders for lamps T8, T12
Pin support for reliable contact
Lamp axis: 16 mm (0.630")
Weight: 4.7/4.5 g, unit: 1000 pcs.
Type: 29300 with stop
Ref. No.: 509134
Ref. No.: 509136 internally shunted
Type: 29301 without stop
Ref. No.: 509135
Ref. No.: 509137 internally shunted